JVC

SERVICE MANUAL

DVD/CD PLAYER Hi-Fi STEREO VIDEO CASSETTE RECORDER

HR-XVC20Us, HR-XVC21Uc

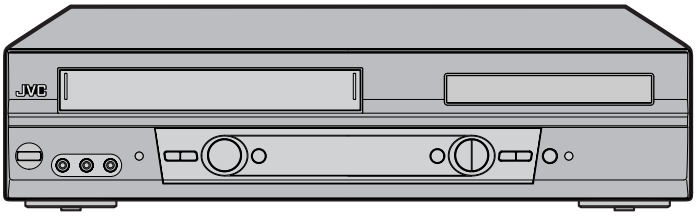

VHS SQPB
4 HEAD Hi-Fi
19µm HEAD
DVD VIDEO · COMPACT disc DIGITAL VIDEO · COMPACT disc DIGITAL AUDIO
WMA MP3 JPEG · dts DIGITAL OUT
DOLBY DIGITAL · SPATIALIZER® N-2-2™

SPECIFICATIONS *(The specifications shown pertain specifically to the model HR-XVC20US.)*

GENERAL

Power supply:	AC 120V 60Hz
Power consumption:	Operation: 16W Stand by: 2W
Weight:	7.9lbs (3.6 kg)
Dimensions:	Width : 16-15/16 inches (430 mm) Height: 3-7/8 inches (99 mm) Depth : 9-13/16 inches (249 mm)
Inputs/Outputs:	
Video:	In: 1Vp-p/75 ohm Out: 1Vp-p/75 ohm
Audio:	In: −8 dBm/50K ohm Out: −8 dBm/1K ohm
Antenna:	UHF/VHF IN/OUT: 75 ohm coaxial
Hi-Fi Frequency Response:	20Hz to 20,000Hz
Hi-Fi Dynamic Range:	More than 90dB

VCR section

Video Head:	4 Rotary Heads
Audio Track:	Hi-Fi Sound - 2 Tracks / MONO Sound - 1 Track
Tuner:	181 Channel Freq. Synthesized VHF 2-13 UHF 14-69 CATV 14-36 (A)-(W) 37-59 (AA)-(WW) 60-85 (AAA)-(ZZZ) 86-94 (86)-(94) 95-99 (A-5)-(A-1) 100-125 (100)-(125) 01 (5A)
RF Channel Output:	Channel 3 or 4, Switchable
F.FWD/REW Time:	Approx. 1 minute 48 seconds (with T-120 Cassette Tape) (at+25°C)

DVD section

Signal system:	NTSC
Applicable disc:	DVD (12cm, 8cm), CD (12cm, 8cm)
Audio characteristics:	DVD: 4Hz - 22KHz
Frequency response:	CD: 4Hz - 20KHz
S/N Ratio:	90dB
Harmonic distortion:	0.02%
Wow and flutter:	Below Measurable Level
Dynamic range:	90dB
Output:	Video : (RCA) 1 Vp-p/75ohm Audio : (RCA) −8 dBm/1Kohm Digital Audio : 0.5Vp-p 75 ohm
Pickup:	CD : Wavelength: 775 - 805 nm Maximum output power: 0.5 mW DVD : Wavelength: 640 - 660 nm Maximum output power: 1.0 mW

ACCESSORIES:

Remote control x 1
Batteries (2 x AA)
75 ohm Coaxial Cable x 1
AUDIO/VIDEO Cable x 1

HR-XVC20US, HR-XVC21UC D2VP11

This service manual is printed on 100% recycled paper.
COPYRIGHT © 2002 VICTOR COMPANY OF JAPAN, LTD

No.82948
2002/12

TABLE OF CONTENTS

Section	Title	Page
Important Safety Precautions		
INSTRUCTIONS		
DISASSEMBLY INSTRUCTIONS		
1.	REMOVAL OF MECHANICAL PARTS AND P.C.BOARDS	1-1
1-1	TOP CABINET AND FRONT CABINET	1-1
1-2	FLAP	1-1
1-3	DECK CD	1-1
1-4	VCR DECK	1-2
1-5	VCR/DVD PCB	1-2
2.	REMOVAL OF VCR DECK PARTS	1-3
2-1	TOP BRACKET	1-3
2-2	CASSETTE HOLDER ASS'Y	1-3
2-3	CASSETTE SIDE L/R	1-3
2-4	LINK UNIT	1-3
2-5	LINK LEVER / FLAP LEVER	1-3
2-6	LOADING MOTOR / WORM	1-4
2-7	TENSION ASS'Y	1-4
2-8	T BRAKE ARM / T BRAKE BAND	1-5
2-9	S REEL / T REEL / IDLER ARM ASS'Y / IDLER GEAR	1-5
2-10	CASSETTE OPENER / PINCH ROLLER BLOCK / P5 ARM ASS'Y	1-6
2-11	A/C HEAD	1-6
2-12	FE HEAD	1-6
2-13	CYLINDER UNIT ASS'Y	1-6
2-14	CAPSTAN DD UNIT	1-7
2-15	MAIN CAM / PINCH ROLLER CAM / JOINT GEAR	1-7
2-16	LOADING GEAR S/T UNIT	1-7
2-17	CLUTCH ASS'Y / RING SPRING / CLUTCH LEVER / CLUTCH GEAR	1-8
2-18	CASSETTE GUIDE POST / INCLINED BASE S/T UNIT / P4 CAP	1-8
3.	REMOVAL AND INSTALLATION OF FLAT PACKAGE IC	1-9
	REMOVAL	1-9
	INSTALLATION	1-10
KEY TO ABBREVIATIONS		1-11
SERVICE MODE LIST		1-13
WHEN "N" IS ALWAYS BEING DISPLAYED ON THE TV MONITOR		1-13
PARENTAL CONTROL - RATING LEVEL 4-DIGIT PASSWORD CANNCELLATION		1-13
WHEN REPLACING EEPROM(MEMORY) IC		1-14
PREVENTIVE CHECKS AND SERVICE INTERVALS		1-15
CONFIRMATION OF HOURS USED		1-15
CLEANING		1-15
SERVICING FIXTURES AND TOOLS		1-16
MECHANISM ADJUSTMENT PARTS LOCATION GUIDE		1-16
MECHANICAL ADJUSTMENT		1-17
	TAPE REMOVAL METHOD AT NO POWER SUPPLY	1-17
	DISC REMOVAL METHOD AT NO POWER SUPPLY	1-17
1.	CONFIRMATION AND ADJUSTMENT	1-17
1-1	CONFIRMATION AND ADJUSTMENT OF TENSION POST POSITION	1-17
1-2	CONFIRMATION OF PLAYBACK TORQUE AND BACK TENSION TORQUE DURING PLAYBACK	1-17
1-3	CONFIRMATION OF VSR TORQUE	1-17
1-4	CONFIRMATION OF REEL BRAKE TORQUE	1-18
2.	CONFIRMATION AND ADJUSTMENT OF TAPE RUNNING MECHANISM	1-18
2-1	GUIDE ROLLER	1-18
2-2	CONFIRMATION AND ADJUSTMENT OF AUDIO/CONTROL HEAD	1-19
2-3	TAPE RUNNING ADJUSTMENT(X-VALUE ADJUSTMENT)	1-19
ELECTRICAL ADJUSTMENTS		1-20
1.	BASIC ADJUSMENT	1-20
1-1	SWITCHING POINT	1-20
ELECTRICAL ADJUSTMENT PARTS LOCATION GUIDE		1-20
IC DESCRIPTIONS		1-21
SERVO TIMING CHART		1-24
MECHANISM TIMING CHART		1-25
TROUBLE SHOOTING GUIDE		1-26
	(VCR SECTION)	1-26
	(DVD SECTION)	1-49

Section	Title	Page
CHARTS AND DIAGRAMS		
	INTERCONNECTION DIAGRAM	2-1
	Y/C/AUDIO/CCD/HEAD AMP SCHEMATIC DIAGRAM	2-3
	VCR SYSCON SCHEMTAIC DIAGRAM	2-5
	TUNER/JACK SCHEMATIC DIAGRAM	2-7
	OPERATION/DISPLAY SCHEMATIC DIAGRAM	2-9
	HI-FI/DEMODULATOR SCHEMATIC DIAGRAM	2-11
	POWER SCHEMATIC DIAGRAM	2-13
	MPEG/MICOM SCHEMATIC DIAGRAM	2-15
	MEMORY SCHEMATIC DIAGRAM	2-17
	DSP SCHEMATIC DIAGRAM	2-19
	MOTOR DRV SCHEMATIC DIAGRAM	2-21
	READ CHANNEL SCHEMATIC DIAGRAM	2-23
	AUDIO/VIDEO SCHEMATIC DIARAM	2-25
	OPERATION SCHEMATIC DIAGRAM	2-27
	PRINTED CIRCUIT BOARD OPERATION	2-29
	PRINTED CIRCUIT BOARD VCR/DVD	2-31
	WAVEFORMS	2-35
	DVD BLOCK DIAGRAM	2-37
	Y/C/AUDIO/CCD/HEAD AMP BLOCK DIAGRAM	2-39
	SYSTEM CONTROL BLOCK DIAGRAM	2-41
	HI-FI/DEMODULATOR BLOCK DIAGRAM	2-43
	TUNER/JACK BLOCK DIAGRAM	2-45
	POWER BLOCK DIAGRAM	2-47
PARTS LIST		
3.1	PACKING AND ACCESSORY ASSEMBLY<M1>	3-1
3.2	FINAL ASSEMBLY<M2>	3-2
3.3	MECHANISM ASSEMBLY<M4>	3-4
3.4	ELECTRICAL PARTS LIST	3-7
	VCR/DVD BOARD ASSEMBLY<03>	3-7
	OPERATION BOARD ASSEMBLY<28>	3-15
REFERENCE		
	SEMICONDUCTOR BASE CONNECTIONS	4-1
	GENERAL SPECIFICATIONS[HR-XVC20US]	4-2

Important Safety Precautions

Prior to shipment from the factory, JVC products are strictly inspected to conform with the recognized product safety and electrical codes of the countries in which they are to be sold. However, in order to maintain such compliance, it is equally important to implement the following precautions when a set is being serviced.

●Precautions during Servicing

1. Locations requiring special caution are denoted by labels and inscriptions on the cabinet, chassis and certain parts of the product. When performing service, be sure to read and comply with these and other cautionary notices appearing in the operation and service manuals.

2. Parts identified by the ⚠ symbol and shaded ( ) parts are critical for safety.
   Replace only with specified part numbers.
   Note: Parts in this category also include those specified to comply with X-ray emission standards for products using cathode ray tubes and those specified for compliance with various regulations regarding spurious radiation emission.

3. Fuse replacement caution notice.
   Caution for continued protection against fire hazard.
   Replace only with same type and rated fuse(s) as specified.

4. Use specified internal wiring. Note especially:
   1) Wires covered with PVC tubing
   2) Double insulated wires
   3) High voltage leads

5. Use specified insulating materials for hazardous live parts. Note especially:
   1) Insulation Tape 3) Spacers 5) Barrier
   2) PVC tubing 4) Insulation sheets for transistors

6. When replacing AC primary side components (transformers, power cords, noise blocking capacitors, etc.) wrap ends of wires securely about the terminals before soldering.

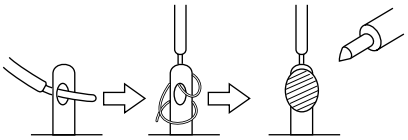

Fig.1

7. Observe that wires do not contact heat producing parts (heatsinks, oxide metal film resistors, fusible resistors, etc.)

8. Check that replaced wires do not contact sharp edged or pointed parts.

9. When a power cord has been replaced, check that 10-15 kg of force in any direction will not loosen it.

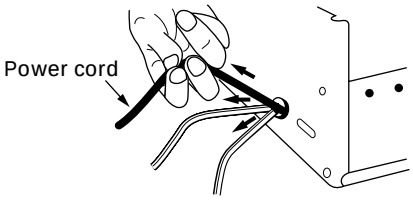

Fig.2

10. Also check areas surrounding repaired locations.

11. Products using cathode ray tubes (CRTs)
    In regard to such products, the cathode ray tubes themselves, the high voltage circuits, and related circuits are specified for compliance with recognized codes pertaining to X-ray emission. Consequently, when servicing these products, replace the cathode ray tubes and other parts with only the specified parts. Under no circumstances attempt to modify these circuits. Unauthorized modification can increase the high voltage value and cause X-ray emission from the cathode ray tube.

12. Crimp type wire connector
    In such cases as when replacing the power transformer in sets where the connections between the power cord and power transformer primary lead wires are performed using crimp type connectors, if replacing the connectors is unavoidable, in order to prevent safety hazards, perform carefully and precisely according to the following steps.

    1) **Connector part number :** E03830-001
    2) **Required tool :** Connector crimping tool of the proper type which will not damage insulated parts.
    3) **Replacement procedure**
       (1) Remove the old connector by cutting the wires at a point close to the connector.
       Important : Do not reuse a connector (discard it).

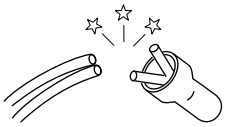

Fig.3

       (2) Strip about 15 mm of the insulation from the ends of the wires. If the wires are stranded, twist the strands to avoid frayed conductors.

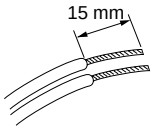

Fig.4

       (3) Align the lengths of the wires to be connected. Insert the wires fully into the connector.

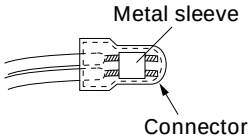

Fig.5

       (4) As shown in Fig.6, use the crimping tool to crimp the metal sleeve at the center position. Be sure to crimp fully to the complete closure of the tool.

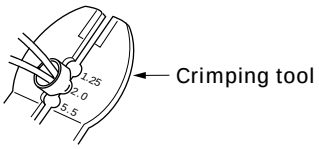

Fig.6

       (5) Check the four points noted in Fig.7.

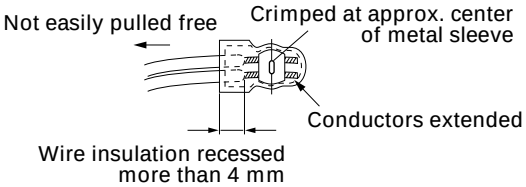

Fig.7

● Safety Check after Servicing

Examine the area surrounding the repaired location for damage or deterioration. Observe that screws, parts and wires have been returned to original positions, Afterwards, perform the following tests and confirm the specified values in order to verify compliance with safety standards.

1. Insulation resistance test

Confirm the specified insulation resistance or greater between power cord plug prongs and externally exposed parts of the set (RF terminals, antenna terminals, video and audio input and output terminals, microphone jacks, earphone jacks, etc.). See table 1 below.

2. Dielectric strength test

Confirm specified dielectric strength or greater between power cord plug prongs and exposed accessible parts of the set (RF terminals, antenna terminals, video and audio input and output terminals, microphone jacks, earphone jacks, etc.). See table 1 below.

3. Clearance distance

When replacing primary circuit components, confirm specified clearance distance (d), (d') between soldered terminals, and between terminals and surrounding metallic parts. See table 1 below.

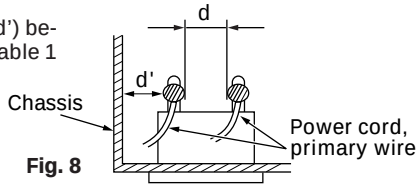

Fig. 8

4. Leakage current test

Confirm specified or lower leakage current between earth ground/power cord plug prongs and externally exposed accessible parts (RF terminals, antenna terminals, video and audio input and output terminals, microphone jacks, earphone jacks, etc.).

Measuring Method : (Power ON)

Insert load Z between earth ground/power cord plug prongs and externally exposed accessible parts. Use an AC voltmeter to measure across both terminals of load Z. See figure 9 and following table 2.

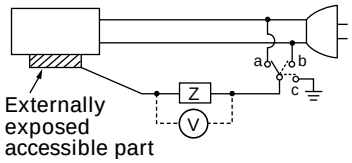

Fig. 9

5. Grounding (Class Ⅰ model only)

Confirm specified or lower grounding impedance between earth pin in AC inlet and externally exposed accessible parts (Video in, Video out, Audio in, Audio out or Fixing screw etc.).

Measuring Method:

Connect milli ohm meter between earth pin in AC inlet and exposed accessible parts. See figure 10 and grounding specifications.

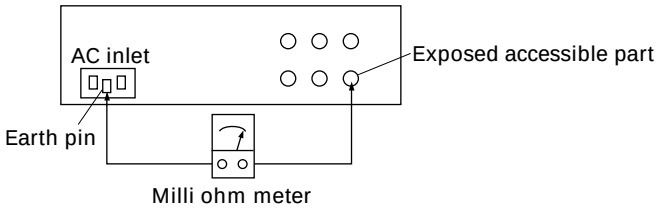

Fig. 10

Grounding Specifications

Region	Grounding Impedance (Z)
USA & Canada	Z ≦ 0.1 ohm
Europe & Australia	Z ≦ 0.5 ohm

AC Line Voltage	Region	Insulation Resistance (R)	Dielectric Strength	Clearance Distance (d), (d')
100 V	Japan	R ≧ 1 MΩ/500 V DC	AC 1 kV 1 minute	d, d' ≧ 3 mm
100 to 240 V			AC 1.5 kV 1 miute	d, d' ≧ 4 mm
110 to 130 V	USA & Canada	1 MΩ ≦ R ≦ 12 MΩ/500 V DC	AC 1 kV 1 minute	d, d' ≧ 3.2 mm
110 to 130 V 200 to 240 V	Europe & Australia	R ≧ 10 MΩ/500 V DC	AC 3 kV 1 minute (Class Ⅱ) AC 1.5 kV 1 minute (Class Ⅰ)	d ≧ 4 mm d' ≧ 8 mm (Power cord) d' ≧ 6 mm (Primary wire)

Table 1 Specifications for each region

AC Line Voltage	Region	Load Z	Leakage Current (i)	a, b, c
100 V	Japan	1 kΩ	i ≦ 1 mA rms	Exposed accessible parts
110 to 130 V	USA & Canada	0.15 μF, 1.5 kΩ	i ≦ 0.5 mA rms	Exposed accessible parts
110 to 130 V 220 to 240 V	Europe & Australia	2 kΩ	i ≦ 0.7 mA peak i ≦ 2 mA dc	Antenna earth terminals
		50 kΩ	i ≦ 0.7 mA peak i ≦ 2 mA dc	Other terminals

Table 2 Leakage current specifications for each region

Note: These tables are unofficial and for reference only. Be sure to confirm the precise values for your particular country and locality.

DISASSEMBLY INSTRUCTIONS

1. REMOVAL OF MECHANICAL PARTS AND P.C. BOARDS

1-1: TOP CABINET AND FRONT CABINET (Refer to Fig. 1-1)

1. Remove the 5 screws ①.
2. Remove the Top Cabinet in the direction of arrow (A).
3. Disconnect the following connector: (CP651).
4. Unlock the 8 supports ②.
5. Remove the Front Cabinet in the direction of arrow (B).
6. Remove the 2 screws ③.
7. Remove the Operation PCB in the direction of arrow (C).

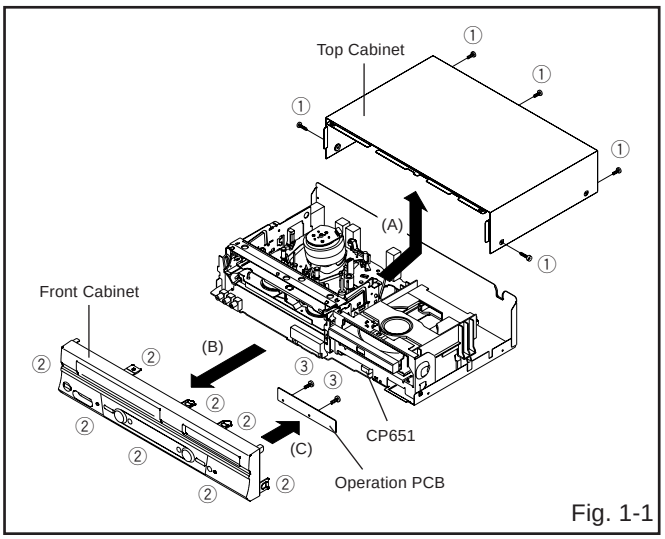

Fig. 1-1

1-2: FLAP (Refer to Fig. 1-2)

1. Open Flap to 90˚ and flex in direction of arrow (A), at the same time slide in direction of arrow (B).
2. Then lift in direction of arrow (C).

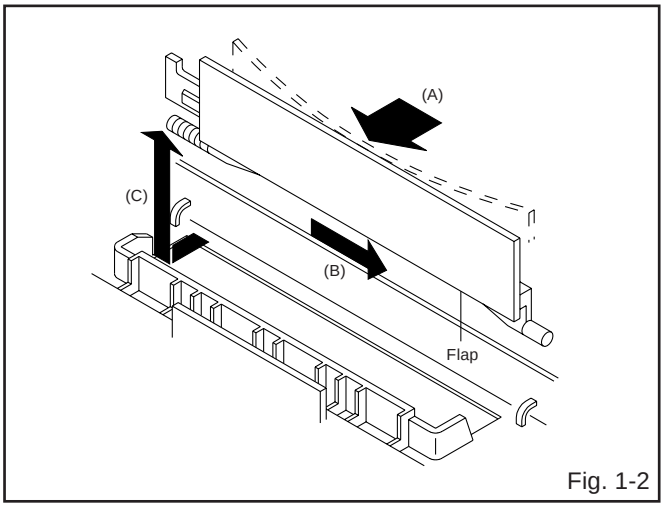

Fig. 1-2

1-3: DECK CD (Refer to Fig. 1-3)

1. Make the short circuit on the position as shown **Fig. 1-3** using a soldering. If you remove the Deck CD with no soldering, the Laser may be damaged.
2. Unlock the support ① and remove the Deck Top Holder in the direction of arrow (A).
3. Remove the 2 screws ②.
4. Remove the 2 screws ③.
5. Disconnect the following connectors: (CP2301, CP2302, CP2601).
6. Remove the Deck CD in the direction of arrow (B).
7. Remove the 3 screws ④.
8. Remove the Front Angle in the direction of arrow (C).

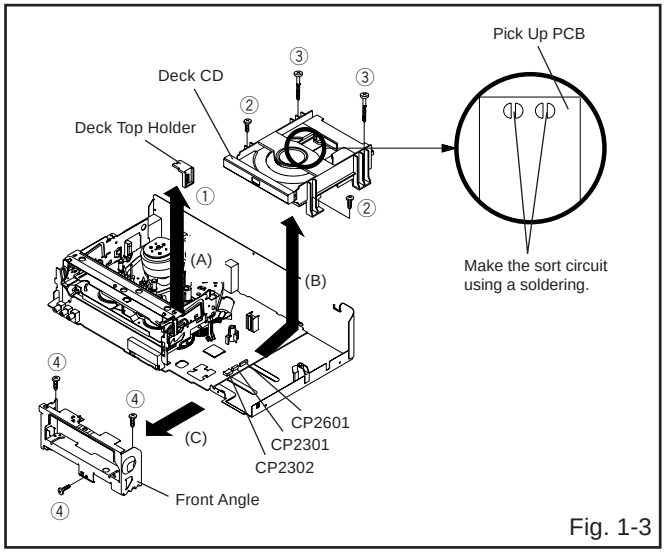

Fig. 1-3

NOTE

When the installation of the Deck CD, remove all the soldering on the short circuit position after the connection of Pick Up PCB and VCR/DVD PCB connector.

DISASSEMBLY INSTRUCTIONS

1-4: VCR DECK (Refer to Fig. 1-4)

1. Remove the 3 screws ②.
2. Disconnect the following connectors: (CP101, CP102, CP103 and CP3001).
3. Remove the AC Head Cover and VCR Deck in the direction of arrow.

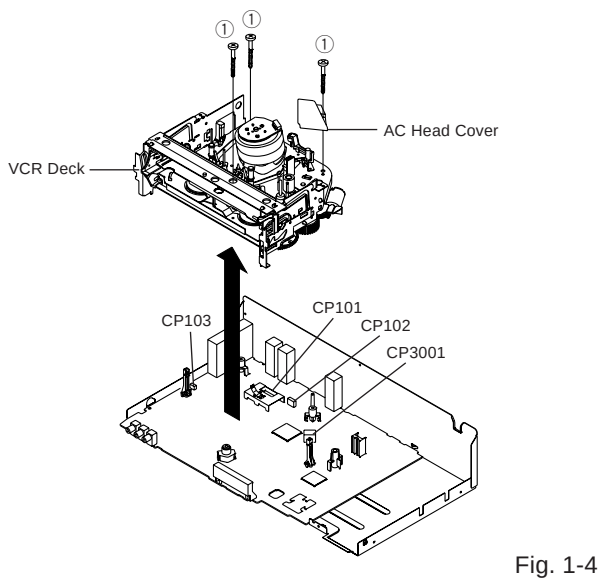

Fig. 1-4

1-5: VCR/DVD PCB (Refer to Fig. 1-5)

1. Remove the screw ①.
2. Remove the 6 screws ②.
3. Remove the VCR/DVD PCB in the direction of arrow.

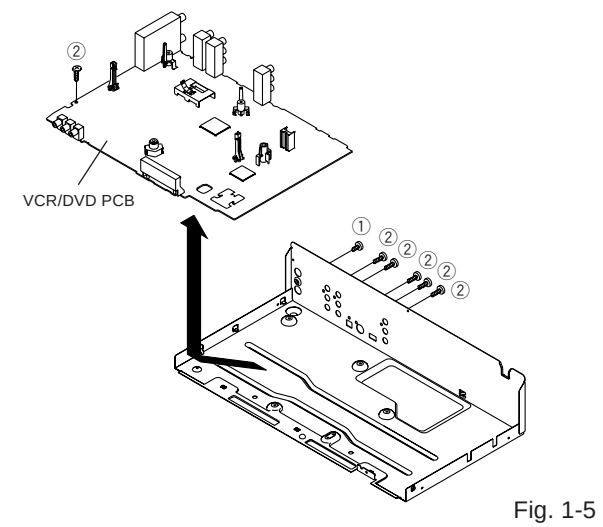

Fig. 1-5

DISASSEMBLY INSTRUCTIONS

2. REMOVAL OF VCR DECK PARTS

2-1: TOP BRACKET (Refer to Fig. 2-1)

1. Extend the 2 supports ①.
2. Slide the 2 supports ② and remove the Top Bracket.

NOTE

1. After the installation of the Top Bracket, bend the support ① so that the Top Bracket is fixed.

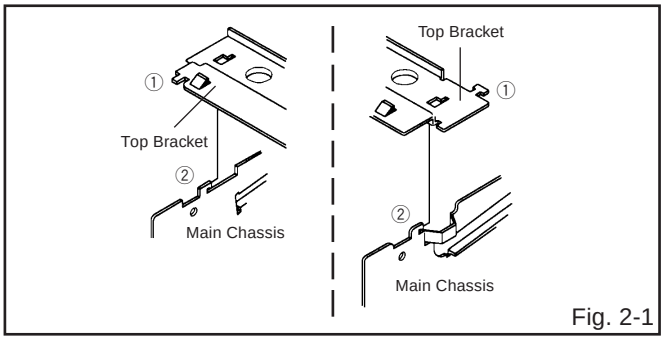

Fig. 2-1

2-2: CASSETTE HOLDER ASS'Y (Refer to Fig. 2-2)

1. Move the Cassette Holder Ass'y to the front side.
2. Push the Locker R to remove the Cassette Side R.
3. Remove the Cassette Side L.

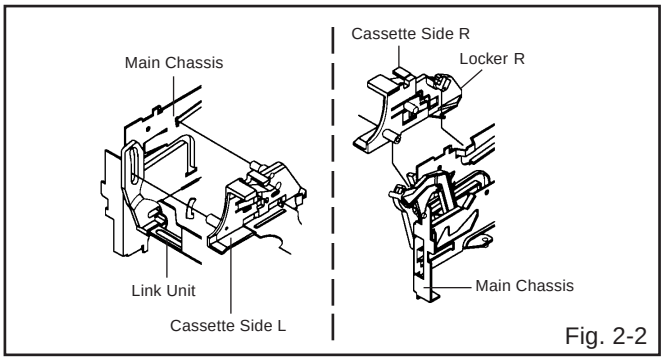

Fig. 2-2

2-3: CASSETTE SIDE L/R (Refer to Fig. 2-3-A)

1. Remove the Locker Spring.
2. Unlock the 4 supports ① and then remove the Cassette Side L/R.
3. Unlock the support ② and then remove the Locker R.

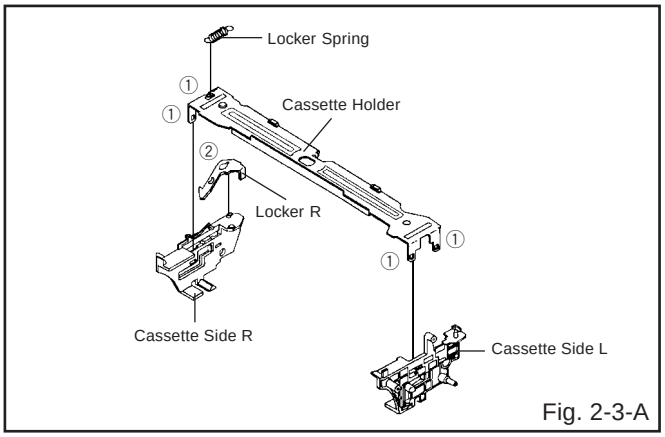

Fig. 2-3-A

NOTE

1. In case of the Locker R installation, check if the one position of Fig. 2-3-B are correctly locked.
2. When you install the Cassette Side R, be sure to move the Locker R after installing.

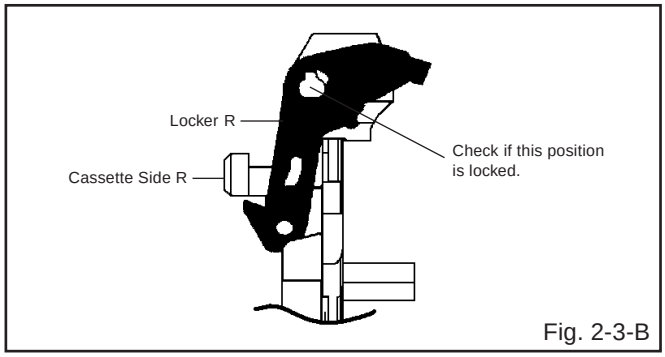

Fig. 2-3-B

2-4: LINK UNIT (Refer to Fig. 2-4)

1. Set the Link Unit to the Eject position.
2. Unlock the support ①.
3. Remove the (A) side of the Link Unit first, then remove the (B) side.

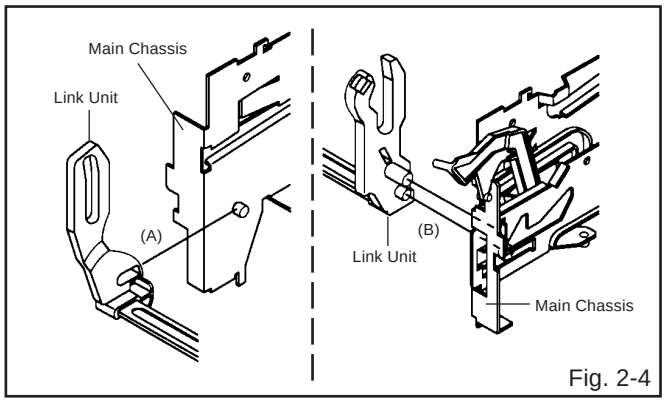

Fig. 2-4

2-5: LINK LEVER/FLAP LEVER (Refer to Fig. 2-5)

1. Extend the support ①.
2. Remove the Link Lever.
3. Remove the Flap Lever.

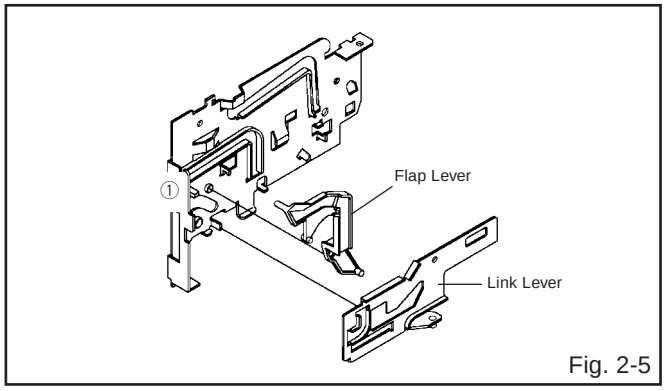

Fig. 2-5

DISASSEMBLY INSTRUCTIONS

2-6: LOADING MOTOR/WORM (Refer to Fig. 2-6-A)

1. Remove the screw ①.
2. Remove the Loading Motor.
3. Remove the Worm.

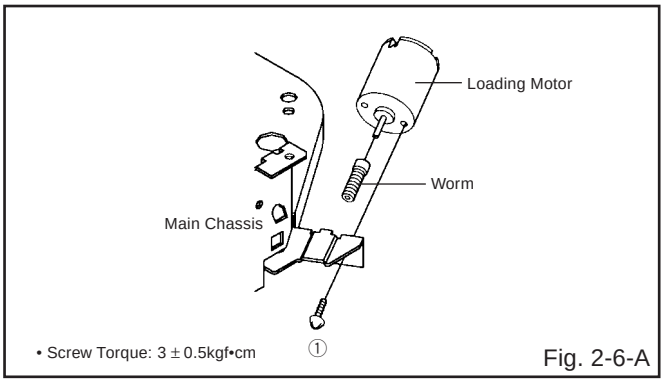

Fig. 2-6-A

NOTE

1. In case of the Worm installation, check if the value of the Fig. 2-6-B is correct.
2. In case of the Loading Motor installation, hook the wire on the Cassette Opener as shown Fig. 2-6-C.
3. When installing the wires between Capstan DD Unit and Loading Motor, connect them correctly as shown Fig. 2-6-D.

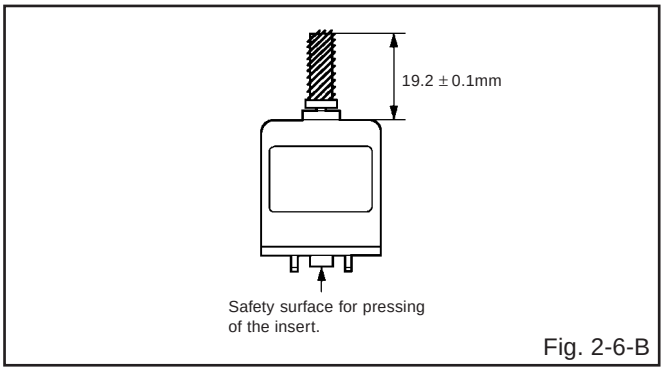

Fig. 2-6-B

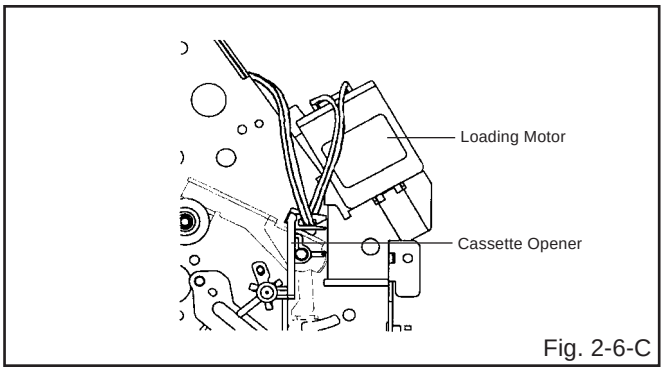

Fig. 2-6-C

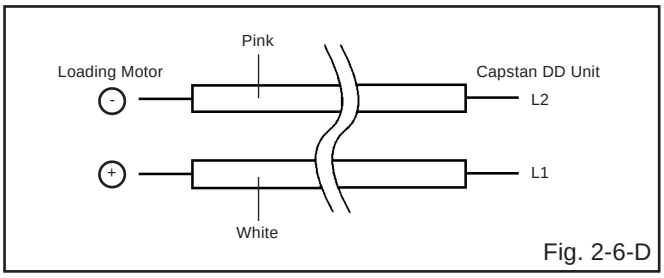

Fig. 2-6-D

2-7: TENSION ASS'Y (Refer to Fig. 2-7-B)

1. Turn the Pinch Roller Cam clockwise so that the Tension Holder hook is set to the position of Fig. 2-7-A to move the Tension Arm Ass'y.
2. Remove the Tension Spring.
3. Unlock the 2 supports ① and remove the Tension Band.
4. Unlock the support ② and remove the Tension Arm Ass'y.
5. Unlock the support ③ and remove the Tension Connect.
6. Float the hook ④ and turn it clockwise then remove the Tension Holder.

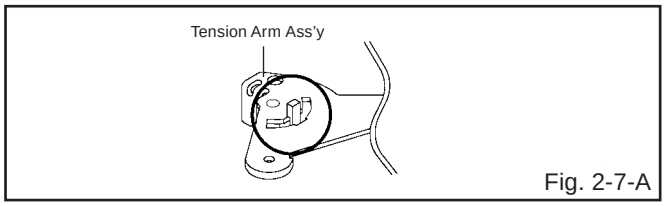

Fig. 2-7-A

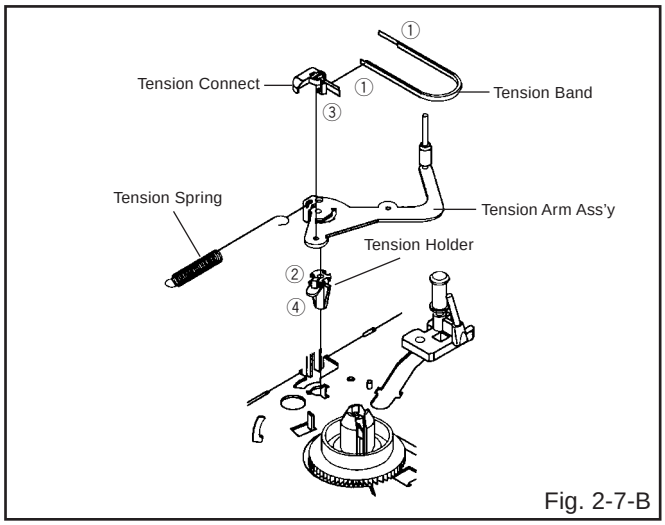

Fig. 2-7-B

NOTE

1. In case of the Tension Band installation, note the direction of the installation. **(Refer to Fig. 2-7-C)**
2. In case of the Tension Band installation, install correctly as Fig. 2-7-D.
3. In case of the Tension Connect installation, install as the circled section of Fig. 2-7-E.

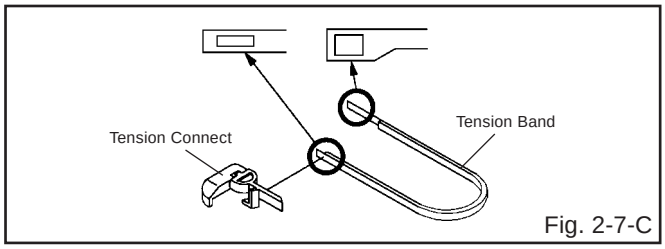

Fig. 2-7-C

DISASSEMBLY INSTRUCTIONS

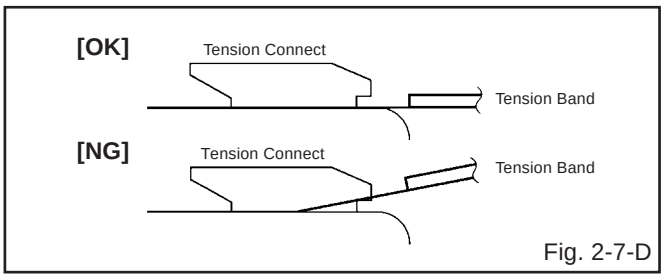

Fig. 2-7-D

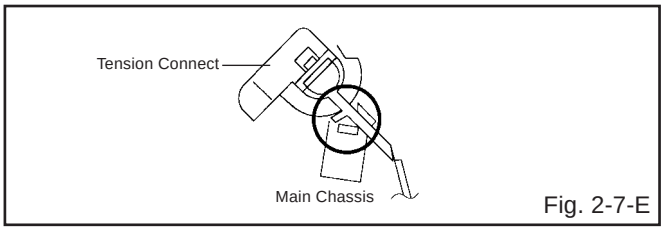

Fig. 2-7-E

2-8: T BRAKE ARM/T BRAKE BAND (Refer to Fig. 2-8-A)

1. Remove the T Brake Spring.
2. Turn the T Brake Arm clockwise and bend the hook section to remove it.
3. Unlock the 2 supports ① and remove the T Brake Band.

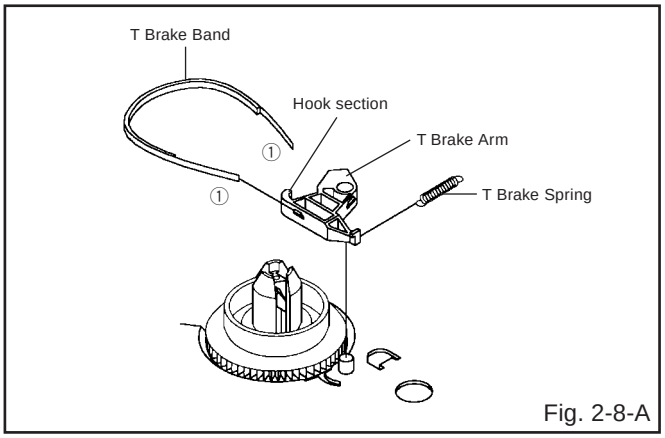

Fig. 2-8-A

NOTE

1. In case of the T Brake Band installation, install correctly as Fig. 2-8-B.

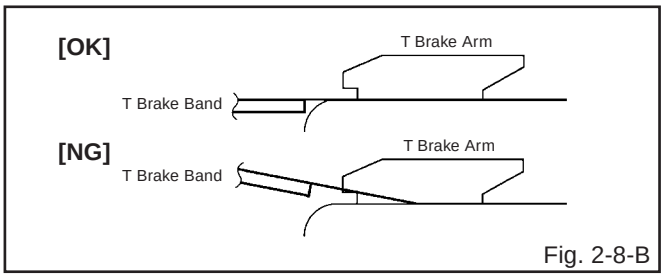

Fig. 2-8-B

2-9: S REEL/T REEL/IDLER ARM ASS'Y/IDLER GEAR (Refer to Fig. 2-9-A)

1. Remove the S Reel and T Reel.
2. Remove the 2 Polyslider Washers ①.
3. Remove the Idler Arm Ass'y and Idler Gear.

NOTE

1. Take care not to damage the gears of the S Reel and T Reel.
2. The Polyslider Washer may be remained on the back of the reel.
3. Take care not to damage the shaft.
4. Do not touch the section "A" of S Reel and T Reel. (Use gloves.) **(Refer to Fig. 2-9-A)** Do not adhere the stains on it.
5. When you install the reel, clean the shaft and grease it (FG-84M). (If you do not grease, noise may be heard in FF/REW mode.)
6. After installing the reel, adjust the height of the reel. **(Refer to MECHANICAL ADJUSTMENT)**

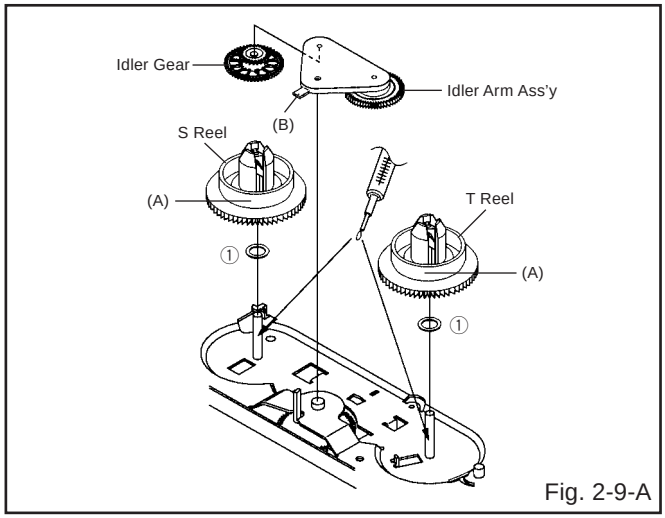

Fig. 2-9-A

NOTE

1. In case of the S Reel and T Reel installation, check if the correct parts are installed. **(Refer to Fig. 2-9-B)**
2. In case of the Idler Arm Ass'y installation, install correctly as Fig. 2-9-C. And also set it so that the section "B" of Fig. 2-9-A is placed under the Main Chassis tab.

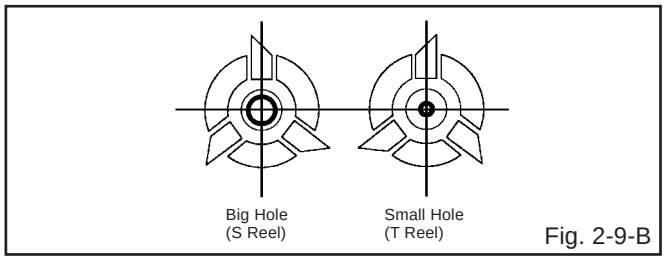

Fig. 2-9-B

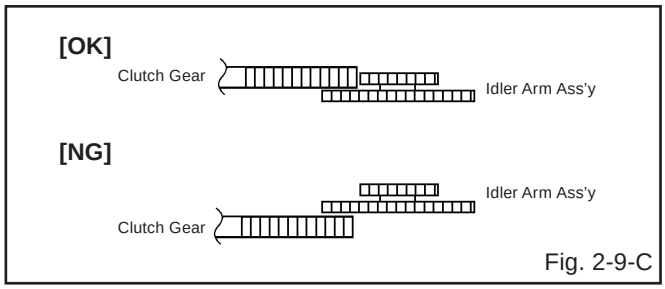

Fig. 2-9-C

DISASSEMBLY INSTRUCTIONS

2-10: CASSETTE OPENER/PINCH ROLLER BLOCK/P5 ARM ASS'Y (Refer to Fig. 2-10-A)

1. Unlock the support ① and remove the Cassette Opener.
2. Remove the Pinch Roller Block and P5 Arm Ass'y.

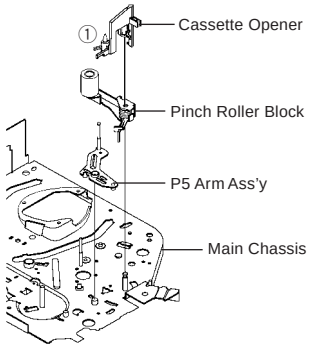

Fig. 2-10-A

NOTE

1. Do not touch the Pinch Roller. (Use gloves.)
2. In case of the Pinch Roller Block and the Pinch Roller Cam installation, install correctly as Fig. 2-10-B.

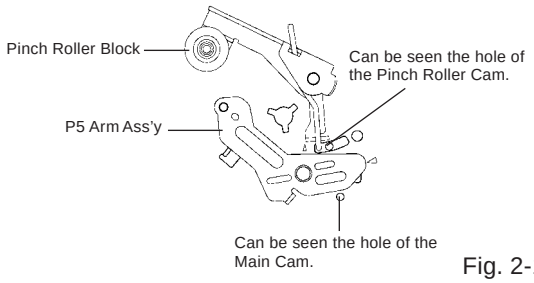

Fig. 2-10-B

2-11: A/C HEAD (Refer to Fig. 2-11-A)

1. Remove the screw ①.
2. Remove the A/C Head Base.
3. Remove the 3 screws ②.
4. Remove the A/C Head and A/C Head Spring.

NOTE

1. Do not touch the A/C Head. (Use gloves.)
2. When you install the A/C Head Spring, install as shown in Fig. 2-11-B.
3. When you install the A/C Head, tighten the screw (1) first, then tighten the screw (2), finally tighten the screw (3).

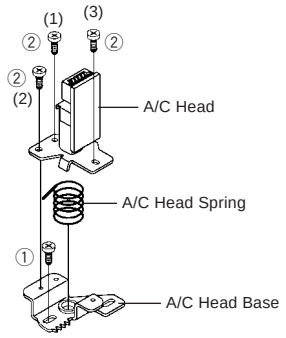

• Screw Torque: 5 ± 0.5kgf•cm (Screw ①)

Fig. 2-11-A

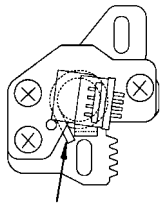

Fig. 2-11-B

2-12: FE HEAD (RECORDER ONLY) (Refer to Fig. 2-12)

1. Remove the screw ①.
2. Remove the FE Head.

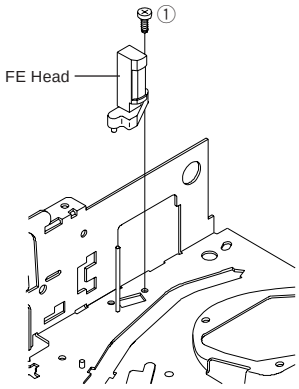

• Screw Torque: 5 ± 0.5kgf•cm
• The FE Head is not installed on the Video Cassette Player.

Fig. 2-12

2-13: CYLINDER UNIT ASS'Y (Refer to Fig. 2-13)

1. Disconnect the following connector: (CD2001)
2. Remove the 3 screws ①.
3. Remove the Cylinder Unit Ass'y.

NOTE

1. When you install the Cylinder Unit Ass'y, tighten the screws from (1) to (3) in order while pulling the Ass'y toward the left front direction.

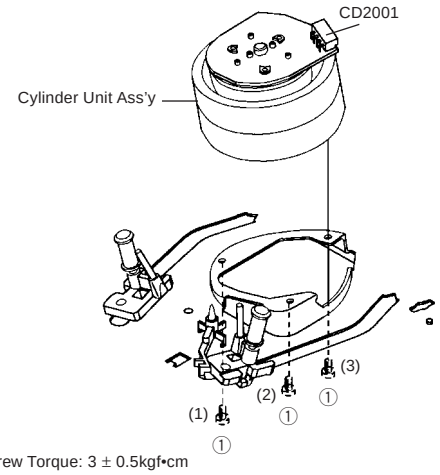

• Screw Torque: 3 ± 0.5kgf•cm

Fig. 2-13

DISASSEMBLY INSTRUCTIONS

2-14: CAPSTAN DD UNIT (Refer to Fig. 2-14-A)

1. Remove the Capstan Belt.
2. Remove the 3 screws ①.
3. Remove the Capstan DD Unit.

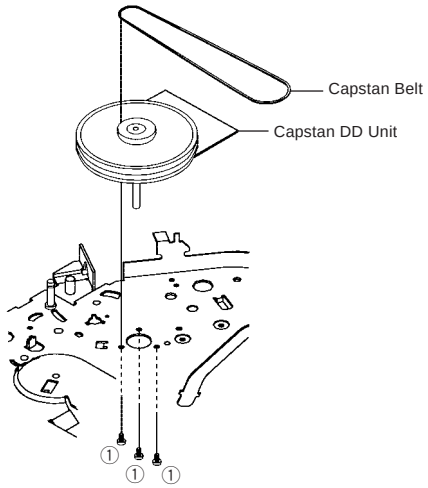

• Screw Torque: 4 ± 0.5kgf•cm

Fig. 2-14-A

NOTE

1. In case of the Capstan DD Unit installation, apply the silicon bond (TSE3843-W) on the position Fig. 2-14-B correctly. (If no silicon bond applied, abnormal noise will be heard on the deck operation.)
   (Refer to Fig. 2-14-B, C)

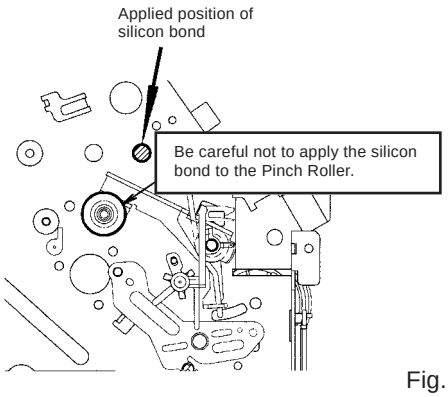

Fig. 2-14-B

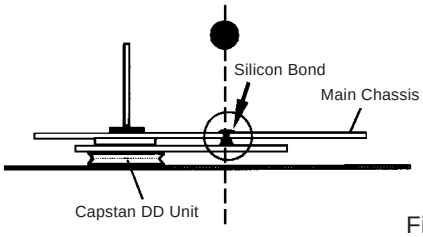

Fig. 2-14-C

2-15: MAIN CAM/PINCH ROLLER CAM/JOINT GEAR (Refer to Fig. 2-15-A)

1. Remove the E-Ring ①, then remove the Main Cam.
2. Remove the E-Ring ②, then remove the Pinch Roller Cam and Joint Gear.

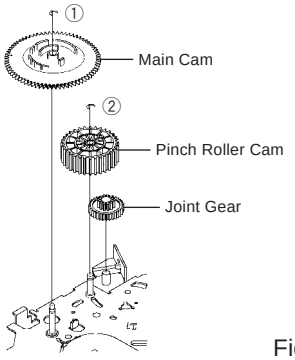

Fig. 2-15-A

NOTE

1. In case of the Pinch Roller Cam and Main Cam installation, install them as the circled section of Fig. 2-15-B so that the each markers are met. **(Refer to Fig. 2-15-B)** And also can be seen the Main Chassis hole through the Main Cam maker hole.

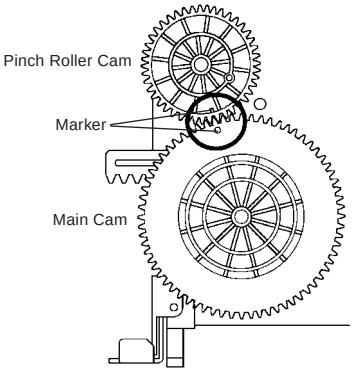

Fig. 2-15-B

2-16: LOADING GEAR S/T UNIT (Refer to Fig. 2-16-A)

1. Remove the E-Ring ① and remove the Main Loading Gear.
2. Remove the Main Rod, Tension Lever, Loading Arm S Unit and Loading Arm T Unit.

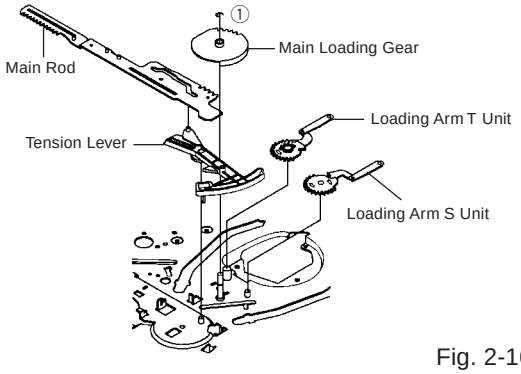

Fig. 2-16-A

DISASSEMBLY INSTRUCTIONS

NOTE

1. When you install the Loading Arm S Unit, Loading Arm T Unit and Main Loading Gear, align each marker. **(Refer to Fig. 2-16-B)**

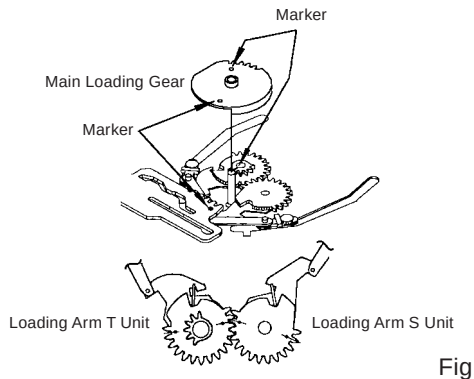

Fig. 2-16-B

2-17: CLUTCH ASS'Y/RING SPRING/CLUTCH LEVER/ CLUTCH GEAR (Refer to Fig. 2-17-A)

1. Remove the Polyslider Washer ①.
2. Remove the Clutch Ass'y and Ring Spring.
3. Remove the Clutch Lever.
4. Remove the Coupling Gear, Coupling Spring and Clutch Gear.

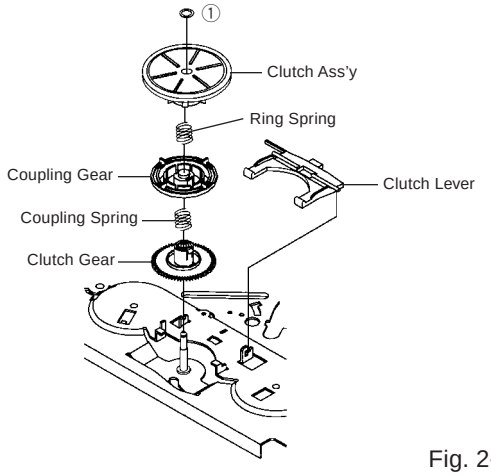

Fig. 2-17-A

NOTE

1. In case of the Clutch Ass'y installation, install it with inserting the spring of the Clutch Ass'y into the dent of the Coupling Gear. **(Refer to Fig. 2-17-B)**

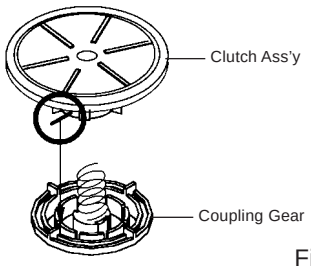

Fig. 2-17-B

2-18: CASSETTE GUIDE POST/INCLINED BASE S/T UNIT/P4 CAP (Refer to Fig. 2-18-A)

1. Remove the P4 Cap.
2. Unlock the support ① and remove the Cassette Guide Post.
3. Remove the Inclined Base S/T Unit.
4. Remove the screw ②.
5. Remove the LED Reflector.

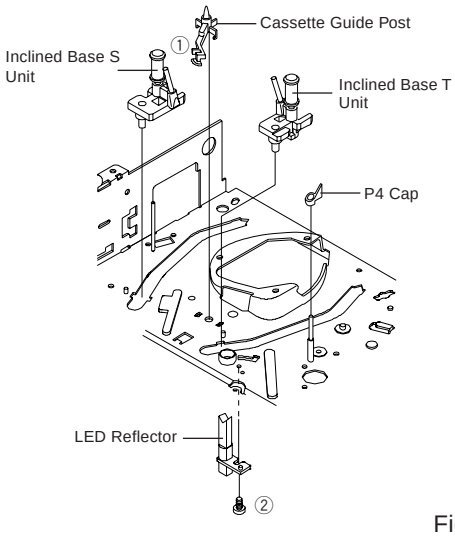

Fig. 2-18-A

NOTE

1. Do not touch the roller of Guide Roller.
2. In case of the P4 Cap installation, install it with parallel for "A" and "B" of Fig. 2-18-B.
3. In case of the Cassette Guide Post installation, install correctly as the circled section of Fig. 2-18-C.

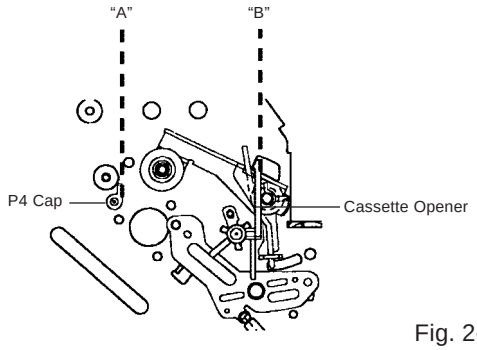

Fig. 2-18-B

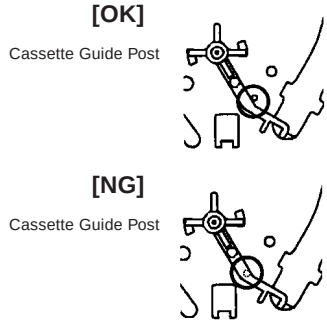

Fig. 2-18-C

DISASSEMBLY INSTRUCTIONS

3. REMOVAL AND INSTALLATION OF FLAT PACKAGE IC

REMOVAL

1. Put the Masking Tape (cotton tape) around the Flat Package IC to protect other parts from any damage. **(Refer to Fig. 3-1.)**

   NOTE

   Masking is carried out on all the parts located within 10 mm distance from IC leads.

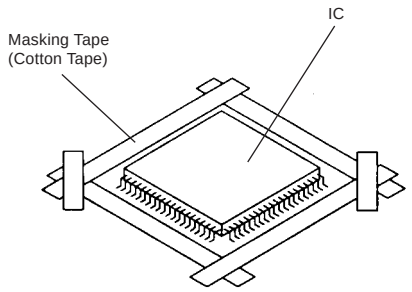

Fig. 3-1

2. Heat the IC leads using a blower type IC desoldering machine. **(Refer to Fig. 3-2.)**

   NOTE

   Do not add the rotating and the back and forth directions force on the IC, until IC can move back and forth easily after desoldering the IC leads completely.

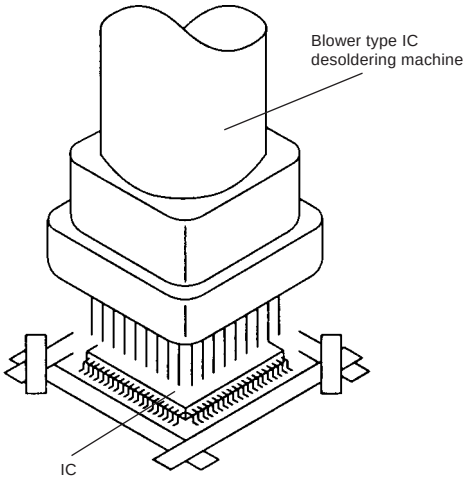

Fig. 3-2

3. When IC starts moving back and forth easily after desoldering completely, pickup the corner of the IC using a tweezers and remove the IC by moving with the IC desoldering machine. **(Refer to Fig. 3-3.)**

   NOTE

   Some ICs on the PCB are affixed with glue, so be careful not to break or damage the foil of each IC leads or solder lands under the IC when removing it.

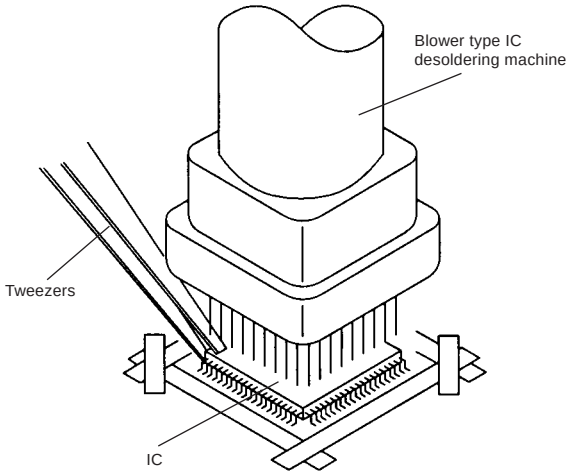

Fig. 3-3

4. Peel off the Masking Tape.
5. Absorb the solder left on the pattern using the Braided Shield Wire. **(Refer to Fig. 3-4.)**

   NOTE

   Do not move the Braided Shield Wire in the vertical direction towards the IC pattern.

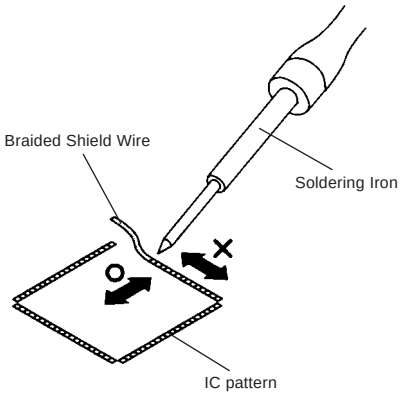

Fig. 3-4

DISASSEMBLY INSTRUCTIONS

INSTALLATION

1. Take care of the polarity of new IC and then install the new IC fitting on the printed circuit pattern. Then solder each lead on the diagonal positions of IC temporarily. **(Refer to Fig. 3-5.)**

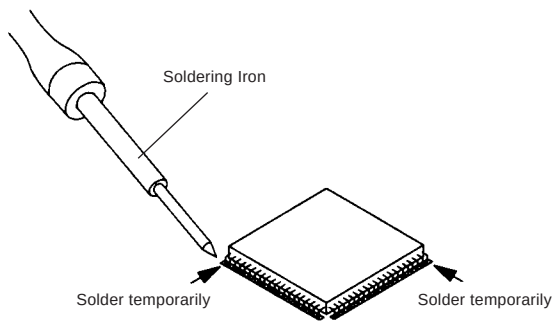

Fig. 3-5

2. Supply the solder from the upper position of IC leads sliding to the lower position of the IC leads. **(Refer to Fig. 3-6.)**

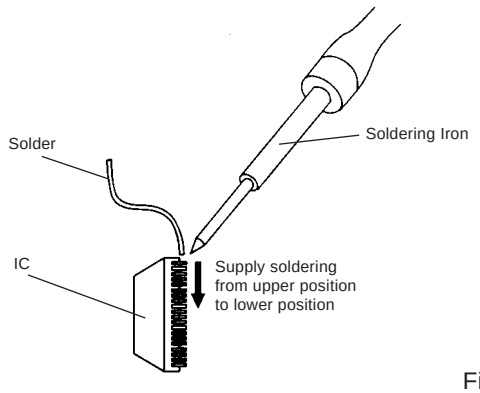

Fig. 3-6

3. Absorb the solder left on the lead using the Braided Shield Wire. **(Refer to Fig. 3-7.)**

   NOTE

   Do not absorb the solder to excess.

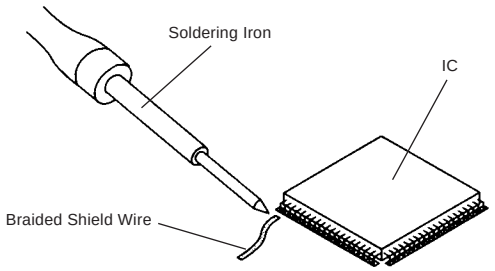

Fig. 3-7

4. When bridge-soldering between terminals and/or the soldering amount are not enough, resolder using a Thin-tip Soldering Iron. **(Refer to Fig. 3-8.)**

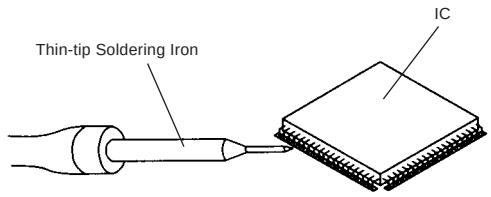

Fig. 3-8

5. Finally, confirm the soldering status on four sides of the IC using a magnifying glass.
   Confirm that no abnormality is found on the soldering position and installation position of the parts around the IC. If some abnormality is found, correct by resoldering.

   NOTE

   When the IC leads are bent during soldering and/or repairing, do not repair the bending of leads. If the bending of leads are repaired, the pattern may be damaged. So, be always sure to replace the IC in this case.

KEY TO ABBREVIATIONS

A	**A/C**	:	Audio/Control
	ACC	:	Automatic Color Control
	AE	:	Audio Erase
	AFC	:	Automatic Frequency Control
	AFT	:	Automatic Fine Tuning
	AFT DET	:	Automatic Fine Tuning Detect
	AGC	:	Automatic Gain Control
	AMP	:	Amplifier
	ANT	:	Antenna
	A.PB	:	Audio Playback
	APC	:	Automatic Phase Control
	ASS'Y	:	Assembly
	AT	:	All Time
	AUTO	:	Automatic
	A/V	:	Audio/Video
B	**BGP**	:	Burst Gate Pulse
	BOT	:	Beginning of Tape
	BPF	:	Bandpass Filter
	BRAKE SOL	:	Brake Solenoid
	BUFF	:	Buffer
	B/W	:	Black and White
C	**C**	:	Capacitance, Collector
	CASE	:	Cassette
	CAP	:	Capstan
	CARR	:	Carrier
	CH	:	Channel
	CLK	:	Clock
	CLOCK (SY-SE)	:	Clock (Syscon to Servo)
	COMB	:	Combination, Comb Filter
	CONV	:	Converter
	CPM	:	Capstan Motor
	CTL	:	Control
	CYL	:	Cylinder
	CYL-M	:	Cylinder-Motor
	CYL SENS	:	Cylinder-Sensor
D	**DATA (SY-CE)**	:	Data (Syscon to Servo)
	dB	:	Decibel
	DC	:	Direct Current
	DD Unit	:	Direct Drive Motor Unit
	DEMOD	:	Demodulator
	DET	:	Detector
	DEV	:	Deviation
E	**E**	:	Emitter
	EF	:	Emitter Follower
	EMPH	:	Emphasis
	ENC	:	Encoder
	ENV	:	Envelope
	EOT	:	End of Tape
	EQ	:	Equalizer
	EXT	:	External
F	**F**	:	Fuse
	FBC	:	Feed Back Clamp
	FE	:	Full Erase
	FF	:	Fast Forward, Flipflop
	FG	:	Frequency Generator
	FL SW	:	Front Loading Switch
	FM	:	Frequency Modulation
	FSC	:	Frequency Sub Carrier
	FWD	:	Forward
G	**GEN**	:	Generator
	GND	:	Ground
H	**H.P.F**	:	High Pass Filter
	H.SW	:	Head Switch
	Hz	:	Hertz
I	**IC**	:	Integrated Circuit
	IF	:	Intermediate Frequency
	IND	:	Indicator
	INV	:	Inverter
K	**KIL**	:	Killer
L	**L**	:	Left
	LED	:	Light Emitting Diode
	LIMIT AMP	:	Limiter Amplifier
	LM, LDM	:	Loading Motor
	LP	:	Long Play
	L.P.F	:	Low Pass Filter
	LUMI.	:	Luminance
M	**M**	:	Motor
	MAX	:	Maximum
	MINI	:	Minimum
	MIX	:	Mixer, mixing
	MM	:	Monostable Multivibrator
	MOD	:	Modulator, Modulation
	MPX	:	Multiplexer, Multiplex
	MS SW	:	Mecha State Switch
N	**NC**	:	Non Connection
	NR	:	Noise Reduction
O	**OSC**	:	Oscillator
	OPE	:	Operation
P	**PB**	:	Playback
	PB CTL	:	Playback Control
	PB-C	:	Playback-Chrominance
	PB-Y	:	Playback-Luminance
	PCB	:	Printed Circuit Board
	P. CON	:	Power Control
	PD	:	Phase Detector
	PG	:	Pulse Generator
	P-P	:	Peak-to Peak
R	**R**	:	Right
	REC	:	Recording
	REC-C	:	Recording-Chrominance
	REC-Y	:	Recording-Luminance
	REEL BRK	:	Reel Brake
	REEL S	:	Reel Sensor
	REF	:	Reference
	REG	:	Regulated, Regulator
	REW	:	Rewind
	REV, RVS	:	Reverse
	RF	:	Radio Frequency
	RMC	:	Remote Control
	RY	:	Relay
S	**S. CLK**	:	Serial Clock
	S. COM	:	Sensor Common
	S. DATA	:	Serial Data
	SEG	:	Segment
	SEL	:	Select, Selector
	SENS	:	Sensor
	SER	:	Search Mode
	SI	:	Serial Input
	SIF	:	Sound Intermediate Frequency
	SO	:	Serial Output
	SOL	:	Solenoid
	SP	:	Standard Play
	STB	:	Serial Strobe
	SW	:	Switch

KEY TO ABBREVIATIONS

S	**SYNC**	:	Synchronization
	SYNC SEP	:	Sync Separator, Separation
T	**TR**	:	Transistor
	TRAC	:	Tracking
	TRICK PB	:	Trick Playback
	TP	:	Test Point
U	**UNREG**	:	Unregulated
V	**V**	:	Volt
	VCO	:	Voltage Controlled Oscillator
	VIF	:	Video Intermediate Frequency
	VP	:	Vertical Pulse, Voltage Display
	V.PB	:	Video Playback
	VR	:	Variable Resistor
	V.REC	:	Video Recording
	VSF	:	Visual Search Fast Forward
	VSR	:	Visual Search Rewind
	VSS	:	Voltage Super Source
	V-SYNC	:	Vertical-Synchronization
	VT	:	Voltage Tuning
X	**X'TAL**	:	Crystal
Y	**Y/C**	:	Luminance/Chrominance

SERVICE MODE LIST

This unit provided with the following SERVICE MODES so you can repair, examine and adjust easily.
To enter to the SERVICE MODE function, press and hold both buttons simultaneously on the main unit or on the main unit and on the remote control for more than a standard time (second).

Set Key	Set Key	Standard Time (seconds)	Operations
CH UP	FF	2	PLAY/REC total hours are displayed on the TV Monitor. Refer to the “PREVENTIVE CHECKS AND SERVICE INTERVALS” (CONFIRMATION OF HOURS USED). Can be checked of the INITIAL DATA of MEMORY IC. Refer to the “WHEN REPLACING EEPROM (MEMORY) IC”.
CH UP	STOP	2	Adjust the SWITHCHING POINT automatically. Refer to the “ELECTRICAL ADJUSTMENT” (SWITHCHING POINT).
CH UP	PLAY	2	Initialization of the factory on VCR. NOTE: Do not use this for the normal servicing. If you set a factory initialization, the memories are reset such as the clock setting, the channel setting, and PLAY/REC total hours.
CH DOWN	POWER	2	VCR operation mode at no connection of DVD. Refer to the “PREPARATION FOR SERVICING” NOTE: Although the DVD is connected, the DVD mode cannot be selected.

Set Key	Remocon Key	Standard Time (seconds)	Operations
REC	4	2	Initialization of the factory on DVD. NOTE: The function will only work without the setting of DVD disc at DVD mode. Do not use this for the normal servicing.
STOP	7	3	Releasing of PARENTAL LOCK. Refer to the “PARENTAL CONTROL - RATING LEVEL”. NOTE: The function will only work without the setting of DVD disc at DVD mode.

<NOTE> WHEN "N" IS ALWAYS BEING DISPLAYED ON THE TV MONITOR. (REMOTE CONTROLLER FORMAT)

This product is usable the remote controller which is used by DVD+VHS of the other brand.
If "N" is always being displayed on the TV monitor, can not control from provided remote controller since this product is other brand format.

• How to return a JVC format.
Turn off the power of the set and push the CHANNEL+ button and the REC button of the set simultaneously.

PARENTAL CONTROL - RATING LEVEL (4 DIGIT PASSWORD CANCELLATION)

If the stored 4 digit password in the Rating Level menu needs to be cancelled, please follow the steps below.

1. Turn Unit ON.
2. Press and hold the '7' key on the remote control unit.
3. Simultaneously press and hold the 'STOP' key on the front panel.
4. Hold both keys for more than 3 seconds.
5. The On Screen Display message 'PASSWORD CLEAR' will appear.
6. The 4 digit password has now been cleared.

WHEN REPLACING EEPROM (MEMORY) IC

If a service repair is undertaken where it has been required to change the MEMORY IC, the following steps should be taken to ensure correct data settings while making reference to TABLE 1.

NOTE: No need setting for after INI 2F.

INI	+0	+1	+2	+3	+4	+5	+6	+7	+8	+9	+A	+B	+C	+D	+E	+F
00	0E	30	BA	60	64	64	4A	86	0B	2B	86	32	8A	08	0A	0F
10	AF	97	95	8A	A0	55	31	04	88	A5	9F	3A	00	10	BF	00
20	3A	11	22	70	61	2A	3A	00	00	00	00	85	A2	B0	00	00

Table 1

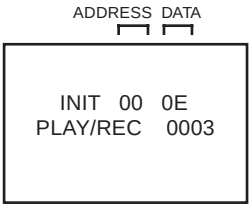

Fig. 1

1. Connect the set to TV Monitor.
2. Turn on the POWER.
3. Press both CH UP button on the set and the FF button on the set for more than 2 seconds.
   ADDRESS and DATA will appear on TV Monitor as **Fig 1**.
4. ADDRESS is now selected and should “blink”. Using the SET + or - button on the remote,
   step through the ADDRESS until required ADDRESS to be changed is reached.
5. Press ENTER to select DATA. When DATA is selected, it will “blink”.
6. Again, step through the DATA using SET + or - button until required DATA value has been selected.
7. Pressing ENTER will take you back to ADDRESS for further selection if necessary.
8. Repeat steps 4 to 7 until all data has been checked.
9. When satisfied correct DATA has been entered, turn POWER off (return to STANDBY MODE) to finish DATA input.
   After the data input, set to the initializing of shipping.
10. Turn on the POWER.
11. Press both CH UP button on the set and the PLAY button on the set for more than 2 seconds.
12. After the finishing of the initializing of shipping, the unit will turn off automatically.

The unit will now have the correct DATA for the new MEMORY IC.

PREVENTIVE CHECKS AND SERVICE INTERVALS

The following standard table depends on environmental conditions and usage.
Parts replacing time does not mean the life span for individual parts.
Also, long term storage or misuse may cause transformation and aging of rubber parts.
The following list means standard hours, so the checking hours depends on the conditions.

Time / Parts Name	500 hours	1,000 hours	1,500 hours	2,000 hours	2,500 hours	Notes
Audio Control Head	■	■	■	●	●	Clean those parts in contact with the tape.
Full Erase Head (Recorder only)	■	■	■	●	●	
Capstan Belt		●	●	●	●	Clean the rubber, and parts which the rubber touches.
Pinch Roller	■	●	●	●	●	
Capstan DD Unit		●	●	●	●	
Loading Motor					●	
Tension Band		●	●	●	●	
T Brake Band		●	●	●	●	
Clutch Ass'y		●	●	●	●	
Idler Arm Ass'y		●	●	●	●	
Capstan Shaft	■	■	■	■	■	
Tape Running Guide Post	■	■	■	■	■	Replace when rolling becomes abnormal.
Cylinder Unit	■	●	●	●	●	Clean the Head

■ : Clean

● : Check it and if necessary, replace it.

CONFIRMATION OF HOURS USED

PLAY/REC total hours can be checked on the FIP.
Total hours are displayed in 16 system of notation.

NOTE: If you set a factory initialization, the total hours is reset to "0".

1. Connect the set to TV Monitor.
2. Turn on the POWER.
3. Press both CH UP button on the set and the FF button on the set for more than 2 seconds.
4. After the confirmation of using hours, turn off the power.

INIT 00 0E — Initial setting content of MEMORY IC.
PLAY/REC 0003 — PLAY/REC total hours.
= (16 x 16 x 16 x thousands digit value)
+ (16 x 16 x hundreds digit value)
+ (16 x tens digit value)
+ (ones digit value)

CLEANING

NOTE

After cleaning the heads with isopropyl alcohol, do not run a tape until the heads dry completely. If the heads are not completely dry and alcohol gets on the tape, damage may occur.

1. AUDIO CONTROL HEAD

Clean the Audio Control Head with the cotton stick soaked by alcohol. Clean the full erase head in the same manner. **(Refer to the figure below.)**

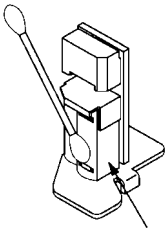

2. TAPE RUNNING SYSTEM

When cleaning the tape transport system, use the gauze moistened with isopropyl alcohol.

3. CYLINDER

Wrap a piece of chamois around your finger. Dip it in isopropyl alcohol. Hold it to the cylinder head softly. Turn the cylinder head counterclockwise to clean it (in the direction of the arrow). **(Refer to the figure below.)**

NOTE

Do not exert force against the cylinder head. Do not move the chamois upward or downward on the head.
Use the chamois one by one.

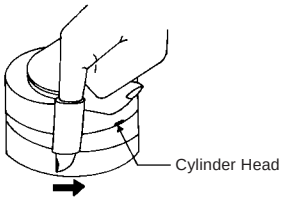

SERVICING FIXTURES AND TOOLS

(4 heads model) VHS Alignment Tape MHP 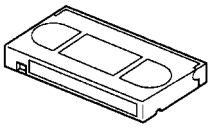	Torque Gauge PUJ48075-2 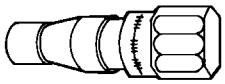	Roller Driver PTU94002-2 	X-JG153 X Value Adjustment Screwdriver 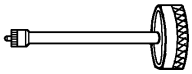
Torque Tape 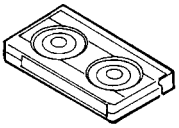	Short Jumper 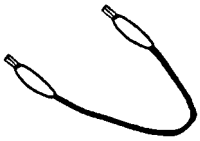		

MECHANISM ADJUSTMENT PARTS LOCATION GUIDE

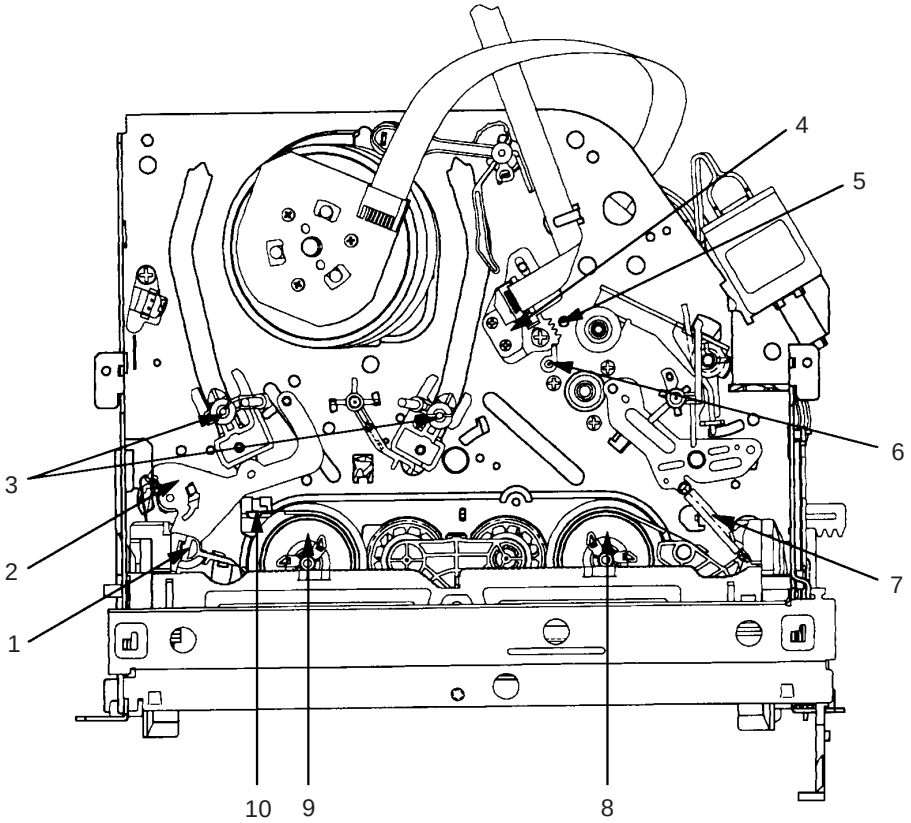

1. Tension Connect
2. Tension Arm
3. Guide Roller
4. Audio/Control Head
5. X value adjustment driver hole
6. P4 Post
7. T Brake Spring
8. T Reel
9. S Reel
10. Adjusting section for the Tension Arm position

MECHANICAL ADJUSTMENTS

TAPE REMOVAL METHOD AT NO POWER SUPPLY

1. Remove the Top Cabinet, Front Cabinet and DVD Block. **(Refer to item 1 of the DISASSEMBLY INSTRUCTIONS.)**
2. Remove the screw ① of the Deck Chassis and remove the Loading Motor. **(Refer to Fig. 2)**
3. Rotate the Pinch Roller Cam in the direction of the arrow by hand to slacken the Video Tape.
4. Rotate the Clutch Ass'y either of the derections to wind the Video Tape in the Cassette Case.
5. Repeat the above step 3~4. Then take out the Video Cassette from the Deck Chassis.
   Be careful not to scratch on the tape.

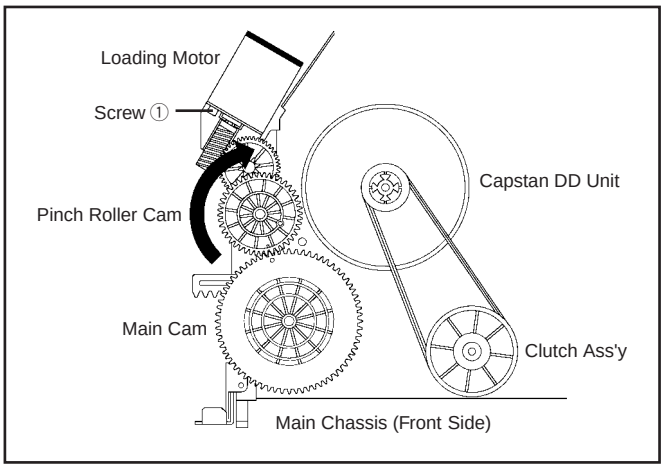

DISC REMOVAL METHOD AT NO POWER SUPPLY

1. Remove the Top Cabinet and Front Cabinet. **(Refer to item 1 of the DISASSEMBLY INSTRUCTIONS.)**
2. Rotate the gear of Deck CD section in the direction of the arrow by hand, remove the disc from Deck CD.

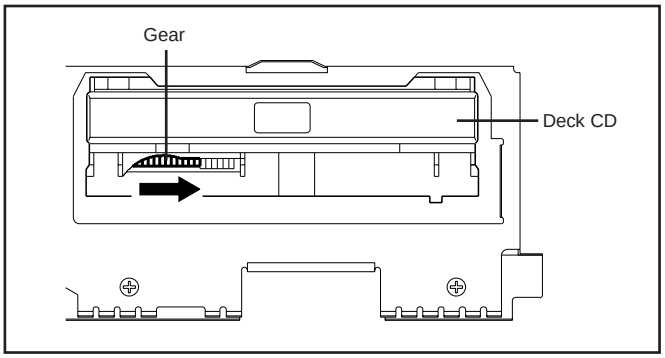

1. CONFIRMATION AND ADJUSTMENT

Read the following NOTES before starting work.

- Place an object which weighs between 450g~500g on the Cassette Tape to keep it steady when you want to make the tape run without the Cassette Holder. (Do not place an object which weighs over 500g.)

1-1: CONFIRMATION AND ADJUSTMENT OF TENSION POST POSITION

1. Set to the PLAY mode.
2. Adjust the adjusting section for the Tension Arm position so that the Tension Arm top is within the standard line of Main Chassis.
3. While turning the S Reel clockwise, confirm that the edge of the Tension Arm is located in the position described above.

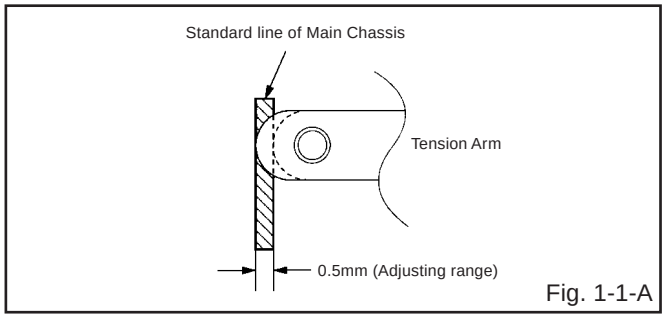

Fig. 1-1-A

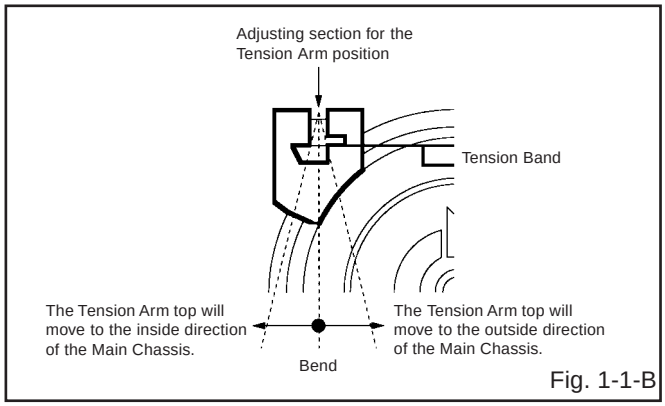

Fig. 1-1-B

1-2: CONFIRMATION OF PLAYBACK TORQUE AND BACK TENSION TORQUE DURING PLAYBACK

1. After confirmation and adjustment of Tension Post position **(Refer to item 1-1)**, load the cassette type torque tape and set to the PLAY mode.
2. Confirm that the right meter of the torque tape indicates 50~90gf•cm during playback in SP mode.
3. Confirm that the left meter of the torque tape indicates 25~40gf•cm during playback in SP mode.

1-3: CONFIRMATION OF VSR TORQUE

1. Install the Torque Gauge on the S Reel. Set to the Picture Search (Rewind) mode. **(Refer to Fig.1-2-B)**
2. Then, confirm that it indicates 120~180gf•cm.

NOTE

Install the Torque Gauge on the reel disk firmly. Press the REW button to turn the reel disk.

MECHANICAL ADJUSTMENTS

1-4: CONFIRMATION OF REEL BRAKE TORQUE

(S Reel Brake) **(Refer to Fig. 1-2-B)**

1. Once set to the Fast Forward mode then set to the Stop mode. While, unplug the AC cord when the Pinch Roller Block is on the position of **Fig. 1-2-A**.
2. Move the Idler Ass'y from the S Reel.
3. Install the Torque Gauge on the S Reel. Turn the Torque Gauge clockwise.
4. Then, confirm that it indicates 60~100gf•cm.

(T Reel Brake) **(Refer to Fig. 1-2-B)**

1. Once set to the Fast Forward mode then set to the Stop mode. While, unplug the AC cord when the Pinch Roller Block is on the position of **Fig. 1-2-A**.
2. Move the Idler Ass'y from the T Reel.
3. Install the Torque Gauge on the T reel. Turn the Torque Gauge counterclockwise.
4. Then, confirm that it indicates 30~50gf•cm.

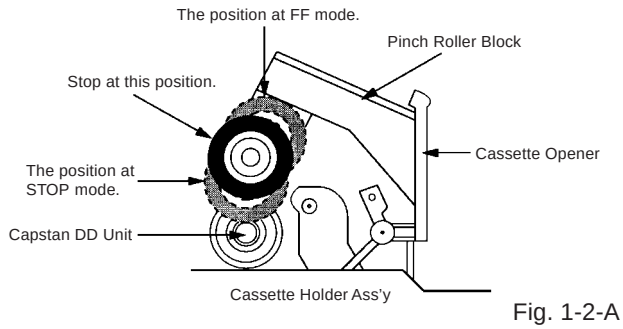

Fig. 1-2-A

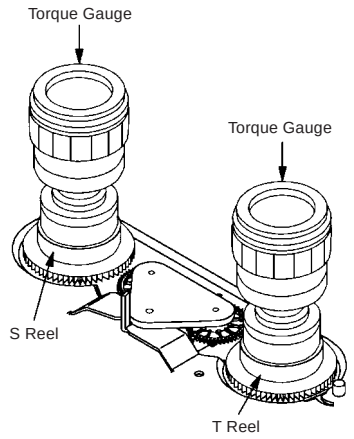

Fig. 1-2-B

NOTE

If the torque is out of the range, replace the following parts.

Check item	Replacement Part
1-3	Idler Ass'y/Clutch Ass'y
1-4	S Reel side: S Reel/Tension Band/Tension Connect/Tension Arm Ass'y T Reel side: T Reel/T Brake Band//T Brake Spring/T Brake Arm

2. CONFIRMATION AND ADJUSTMENT OF TAPE RUNNING MECHANISM

Tape Running Mechanism is adjusted precisely at the factory. Adjustment is not necessary as usual. When you replace the parts of the tape running mechanism because of long term usage or failure, the confirmation and adjustment are necessary.

2-1: GUIDE ROLLER

1. Playback the VHS Alignment Tape **(MHP)**.
2. Connect CH-1 of the oscilloscope to **TP101 (Envelope)** and CH-2 to **TP3002 (SW Pulse)**.
3. Press and hold the Tracking-Auto button on the remote control more than 2 seconds to set tracking to center.
4. Trigger with SW Pulse and observe the envelope. **(Refer to Fig. 2-1-A)**
5. When observing the envelope, adjust the Roller Driver **(PTU94002-2)** slightly until the envelope will be flat. Even if you press the Tracking Button, adjust so that flatness is not moved so much. **(Refer to Fig. 2-1-B)**
6. Adjust so that the A : B ratio is better than 3 : 2 as shown in **Fig. 2-1-C**, even if you press the Tracking Button to move the envelope (The envelope waveform will begin to decrease when you press the Tracking Button).
7. Adjust the PG shifter during playback. **(Refer to the ELECTRICAL ADJUSTMENTS)**

NOTE

After adjustment, confirm and adjust A/C head. **(Refer to item 2-2)**

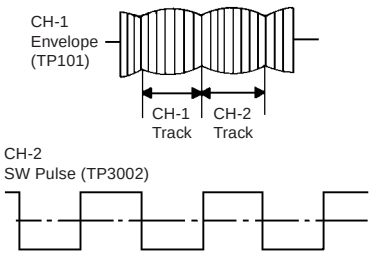

Fig. 2-1-A

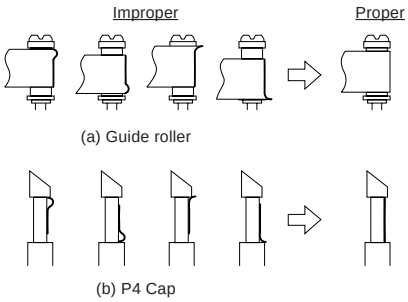

Fig. 2-1-B

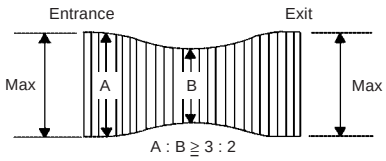

Fig. 2-1-C

MECHANICAL ADJUSTMENTS

2-2: CONFIRMATION AND ADJUSTMENT OF AUDIO/ CONTROL HEAD

When the Tape Running Mechanism does not work well, adjust the following items.

1. Playback the VHS Alignment Tape **(MHP)**.
2. Confirm that the reflected picture of stamp mark is appeared on the tape prior to P4 Post as shown in **Fig. 2-2-A**.
   a) When the reflected picture is distorted, turn the screw ① clockwise until the distortion is disappeared.
   b) When the reflected picture is not distorted, turn the screw ① counterclockwise until little distortion is appeared, then adjust the a).
3. Turn the screw ② to set the audio level to maximum.
4. Confirm that the bottom of the Audio/ Control Head and the bottom of the tape is shown in **Fig. 2-2-C**.
   c) When the height is not correct, turn the screw ③ to adjust the height. Then, adjust the 1~3 again.

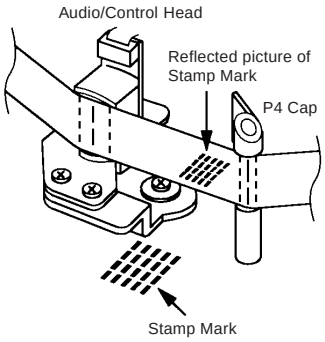

Fig. 2-2-A

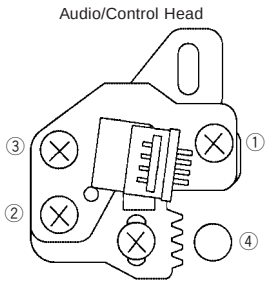

Fig. 2-2-B

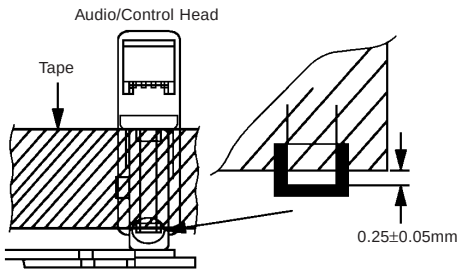

Fig. 2-2-C

2-3: TAPE RUNNING ADJUSTMENT (X VALUE ADJUSTMENT)

1. Confirm and adjust the position of the Tension Post. **(Refer to item 1-1)**
2. Adjust the Guide Roller. **(Refer to item 2-1)**
3. Confirm and adjust the Audio/Control Head. **(Refer to item 2-2)**
4. Connect CH-1 of the oscilloscope to **TP3002**, CH-2 to **TP101** and CH-3 to **Audio Out**.
5. Playback the VHS Alignment Tape **(MHP)**.
6. Press and hold the Tracking-Auto button on the remote control more than 2 seconds to set tracking to center.
7. Set the X Value adjustment driver **(X-JG153)** to the ④ of **Fig. 2-2-B**. At first, turn the Audio/Control Head position fully toward the capstan side. Then adjust X Value to turn it back gradually toward the cylinder side and stop on the second peak point position of the envelope.

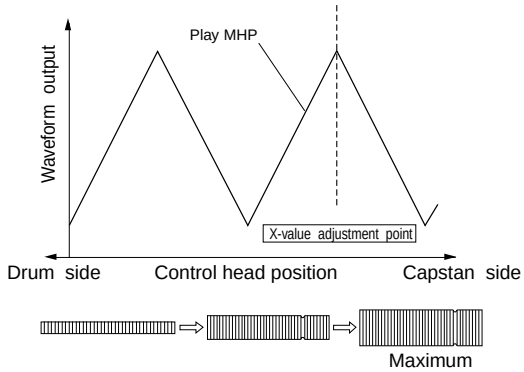

Fig. 2-3

8. Perform tracking operation and confirm the envelope is maximum on the tracking center position.
9. Playback the VHS Alignment Tape **(MHP-L)**.
10. Perform tracking operation and confirm the envelope is maximum on the tracking center position. If envelope is not maximum, should be fine-tune the X-VALUE.

ELECTRICAL ADJUSTMENTS

Read and perform this adjustment when repairing the circuits or replacing electrical parts or PCB assemblies.

1. BASIC ADJUSTMENT

CAUTION

When you exchange IC and Transistor for a heat sink, apply the silicon grease **(YG6260M)** on the contact section of the heat sink. Before applying new silicon grease, remove all the old silicon grease. (Old grease may cause damages to the IC and Transistor.)

1-1: SWITCHING POINT

CONDITIONS

MODE-PLAYBACK
Input Signal-Alignment Tape **(MHP)**

INSTRUCTIONS

1. Connect CH-1 on the oscilloscope to **TP3002** and CH-2 to **TP8001**.
2. Playback the alignment tape. **(MHP)**
3. Press and hold the Tracking-Auto button on the remote control more than 2 seconds to set tracking to center.
4. Press both CH UP button on the set and the STOP button on the set for more than 2 seconds.

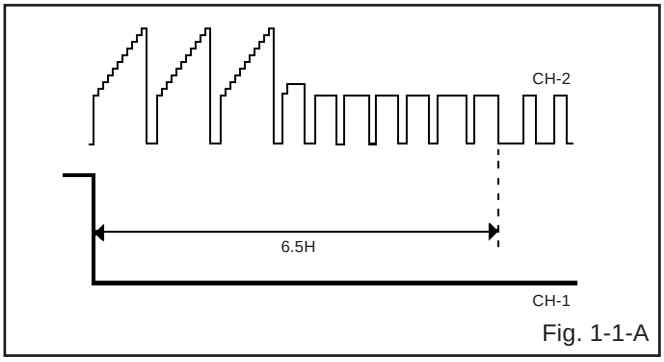

Fig. 1-1-A

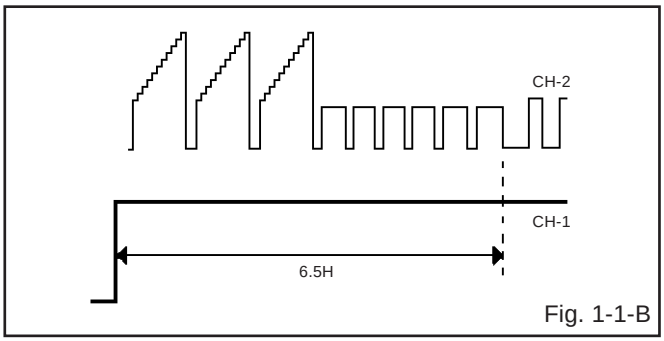

Fig. 1-1-B

ELECTRICAL ADJUSTMENT PARTS LOCATION GUIDE (Connector Connections)

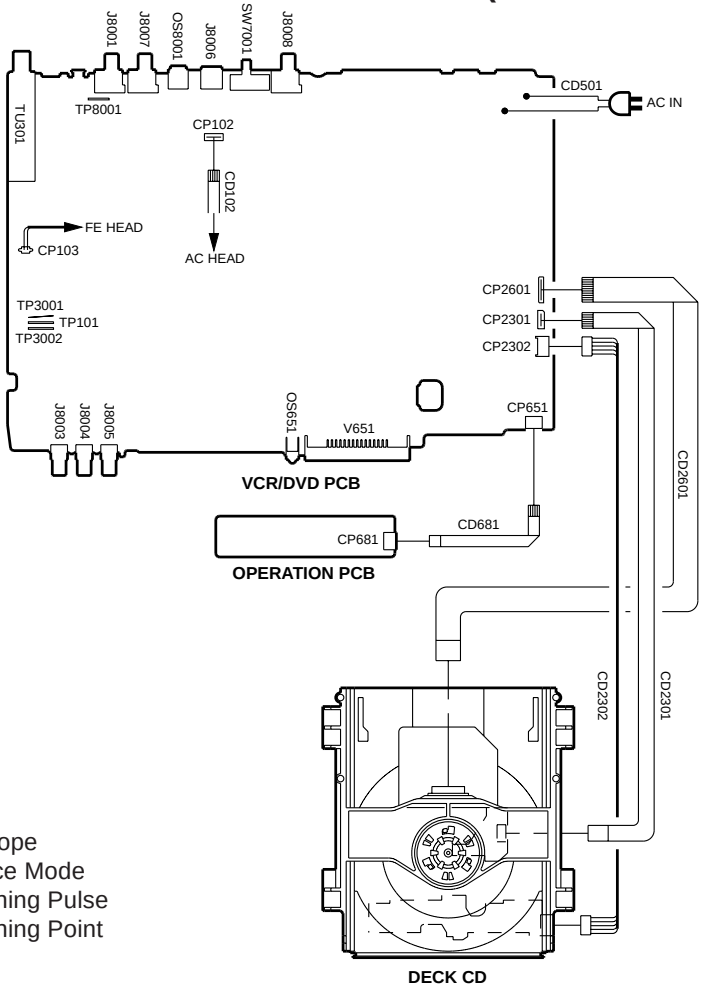

TP101 : Envelope
TP3001 : Service Mode
TP3002 : Switching Pulse
TP8001 : Switching Point

IC DESCRIPTIONS

VCR/DVD PCB OEC0132A (IC3001)

No.	PORT	PIN NAME	I/O	DESCRIPRION
1	SVSS	SVSS	-	Ground.
2	CTL_REF	CTL_REF		Output terminal for CTL amp REF (1/2 SVCC)
3	CTL-H(+)	CTL-H(+)		Input and output terminal of Control Head.
4	CTL-H(-)	CTL-H(-)		Input terminal of Control Head.
5	CTL_BIAS	CTL_BIAS		Output terminal for bias.
6	CTL_FB	CTL_FB		Input terminal for CTL feedback
7	CTL_AMP(O)	CTL_AMP(O)		Output terminal for amp out.
8	CTL_AMP(I)	CTL_AMP(I)		Input terminal for CTL shumit amp .
9	CFG	CFG		Input terminal for CAPSTAN FG signal detection.
10	SVCC	SVCC		+ 5V (Servo)
11	AFC_PC	AFC_PC		AFC oscilator (external circuit).
12	AFC_OSC	AFC_OSC		AFC oscilator (external circuit).
13	AFC_LPF	AFC_LPF		LPF connection for AFC OSC.
14	CSYN/HSYN	CSYNC	OUT	Output terminal for composite SYNC.
15	VLPF/VSYN	VSYNC	IN	Input terminal for composite SYNC.(from 14pin)
16	CV_IN2	CV_IN2	IN	Composite Video input terminal.(for data slicer)
17	CV_IN1	CV_IN1	IN	Composite Video input terminal.(for OSD)
18	OSD VCC	OSDVCC	-	+ 5V
19	CV_OUT	CV_OUT	OUT	Composite Video output.(with OSD)
20	OSD_VSS	OSD_VSS	-	Ground.
21	4/2 FSC_OUT	4/2 FSC_OUT	OUT	4 FSC pulse.
22	4/2 FSC_IN	4/2 FSC_IN	IN	4 FSC pulse.
23	AVSS	AVSS	-	Ground.
24	AN-B	VIDEO_ENV	IN	Input terminal of video RF envelope.
25	AN-A	BOT-H	IN	Tape start sensor input signal.
26	AN-9	EOT-H	IN	Tape end sensor input signal.
27	AN8	MS_SEN-B	IN	Input terminal of mecha state sensor.
28	P07/AN7	MS_SEN-A	IN	
29	P06/AN6	KEY-B	IN	Main unit key input.
30	P05/AN5	KEY-A	IN	
31	P04/AN4	STEREO_SEL	IN	Input terminal for the judgement of voice reception condition.
32	P03/AN3	HI-FI_ENV	IN	Input terminal of HiFi RF envelope.
33	P02/AN2	AFT-S_CURVE	IN	AFT S CURVE input for tuner.
34	P01/AN1	SERVICE	IN	Input terminal for Service Mode.
35	P00/AN0	TAB SW	IN	Input terminal for judge the tape if it has TAB or not.
36	AVCC	AVCC	-	ON/OFF control Micon AD section.
37	P10/IRQ0	POWER_FAIL	IN	Input terminal of Power fail signal.
38	P11/IRQ1	VIDEO MUTE H	OUT	H for at AUTO_CLOCK in POWER OFF.
39	P12/IRQ2	POWER ON L	OUT	For control the user power switch ON/OFF.

IC DESCRIPTIONS

VCR/DVD PCB OEC0132A (IC3001)

40	P13/IRQ3	REEL-S	IN	Input terminal of reel sensor supply.
41	P14/IRQ4	REEL-T	IN	Input terminal of reel sensor take up.
42	P15/IRQ5	POWER ON-H	OUT	For control the user power switch ON/OFF.
43	P16/IC	REM_IN	IN	Receive the remote control signal.
44	P17/TMOW	DVD RESET	OUT	For control the DVD RESET.
45	P67/RP7/TMB	DVD POWER CTL	OUT	Output terminal for DVD power CTL.(3.3V/9V)
46	P66/RP6/ADTRG	DVD LED	OUT	The DVD LED light-up/put-off control output.
47	P65/RP5	VCR LED	OUT	The VCR LED light-up/put-off control output.
48	P64/RP4	1G/T-REC LED	OUT	LEM(LED Module) control terminal.
49	P63/RP3	2G/REC LED	OUT	LEM(LED Module) control terminal.
50	P62/RP2	3G/TV/VCR LED	OUT	LEM(LED Module) control terminal.
51	P61/RP1	4G	OUT	LEM(LED Module) control terminal.
52	P60/RP0	5G	OUT	LEM(LED Module) control terminal.
53	P37/TM0	Y/C CLOCK	OUT	Control terminal for Y/C. (CLOCK).
54	P36/BUZZ	Y/C DATA	OUT	Control terminal for Y/C.(DATA).
55	P35	SEG1	OUT	LEM(LED Module) control terminal.
56	VCC	VCC	-	Power of CPU.
57	VSS	VSS	-	Ground.
58	P27	SEG2	OUT	LEM(LED Module) control terminal.
59	P26	SEG3	OUT	LEM(LED Module) control terminal.
60	P25	SEG4	OUT	LEM(LED Module) control terminal.
61	P24/SCL1	IIC CLK	OUT	CLOCK terminal for IIC BUS communication.
62	P23/SDA1	IIC DATA	OUT	DATA terminal for IIC BUS communication.
63	P22/SCK1	SEG5	OUT	LEM(LED Module) control terminal.
64	P21/SO1	SO1/TX	OUT	Input terminal for DVD communication.(asynchronous)
65	P20/SI1	SI1/RX	IN	Output terminal for DVD communication.(asynchronous)
66	P47/RPTRG	SEG6	OUT	LEM(LED Module) control terminal.
67	P46/FTOB	SEG7	OUT	LEM(LED Module) control terminal.
68	P45/FTOA	SEG8	OUT	LEM(LED Module) control terminal.
69	P44/FTID	NC	OUT	Not used.
70	P43/FTIC	NC	OUT	Not used.
71	P42/FTIB	SEG9	OUT	LEM(LED Module) control terminal.
72	P41/FTIA	NC	OUT	Not used.
73	P40/PWM14	SEG10	OUT	LEM(LED Module) control terminal.
74	FEW	FEW	IN	FZTAT Write protect.
75	X2	X2	OUT	Subclock pulse(32.768KHz)
76	X1	X1	IN	
77	/RESET	/RESET	IN	RESET will be done when the voltage goes to HIGH after the reset signal.
78	OSC1	OSC1	IN	Connect the main crystal(10MHz)

IC DESCRIPTIONS

VCR/DVD PCB OEC0132A (IC3001)

79	VSS	VSS	-	Ground.
80	OSC2	OSC2	OUT	Connect the main crystal(10MHz)
81	VCL	VCL	IN	Connect the capacitor
82	MD0	MD0	IN	FZTAT Write MODE.
83	P34/PWM2	NC	OUT	not used.
84	P33/PWM1	CAP_LIMIT	OUT	Switch the maximum output current of the Capstan Motor.
85	P32/PWM0	TUNER AUDIO MUTE-H	OUT	Output low at tuner and output high at external input/play.
86	P31/SV2	VCR-H	OUT	H for at PLAY in VCR MODE. L for except above case.
87	P30/SV1	POWER_MUTE	OUT	audio mute at POWER ON/OFF.
88	P70/PPG0	SYS_MUTE	OUT	audio mute for DVD at POWER ON/OFF.
89	P71/PPG1	NC	OUT	Not used.
90	P72/PPG2	NC	OUT	Not used.
91	P73/PPG3	AV SW_2	OUT	Control rear/front video signal.(at AV X 2)
92	P74/PPG4/RP8	AV SW_1	OUT	Control DVD/VCR video/audio signal.
93	P75/PPG5/RP9	Y/C CS	OUT	Control terminal for Y/C. (CHIP SELECT).
94	P76/PPG6/RPA	RF CH SW	OUT	3/4 ch Selection for the RF CH.
95	P77/RPG7/RPB	AUDIO_MUTE-H	OUT	L for at AUDIO MUTE and POWER OFF. H for except above case.
96	P80/YCO	V_REC_ST-H	OUT	On control of A/V recording(Whole width erase) circuit.
97	P81/EXCAP/YBO	LDM CTL	OUT	Loading motor control terminal.
98	P82/EXCTL	CAP_FWD-H	OUT	Capstan forward and backward command.
99	P83/C,ROT/R	C.ROTARY	OUT	Color Rotary Control output.
100	P84/H.AMP/SW/G	H.AMP.SW	OUT	Switching output of Head Amp SW.
101	P85/COMP/B	COMP	IN	Comparison results input of Playback Envelope level on SP/LP heads (4 heads).
102	P85/EZTTRG	CAP_FULL	OUT	Output the HIGH during the acceleration force of capstan motor at SLOW mode.
103	P87/DPG	CYL_SPEED_UP	OUT	Output terminal for correct cylinder during SLOW.
104	DFG	D FG/PG	IN	Input terminal for DRUM FG signal detection.
105	VIDEO_FF	VIDEO_H.SW	OUT	Output terminal of Video Head SW.
106	AUDIO_FF	HI-FI H.SW	OUT	Output terminal of HI-FI Head SW.
107	DRUM_PWM	DRUM_PWM	OUT	PWM output of Cylinder control.
108	CAP_PWM	CAP_PWM	OUT	PWM output of Capastan control.
109	V-PULSE	DUMMY_V-SYNC	OUT	Virtual V Pulse output.
110	SV VSS	SV VSS	-	Ground.
111	C.SYNC_IN	SYNC	IN	Input terminal for composite SYNC.
112	VCC	VCC(SV)	-	+ 5V

SERVO TIMING CHART

VCR/DVD PCB IC3001 (OEC0132A)

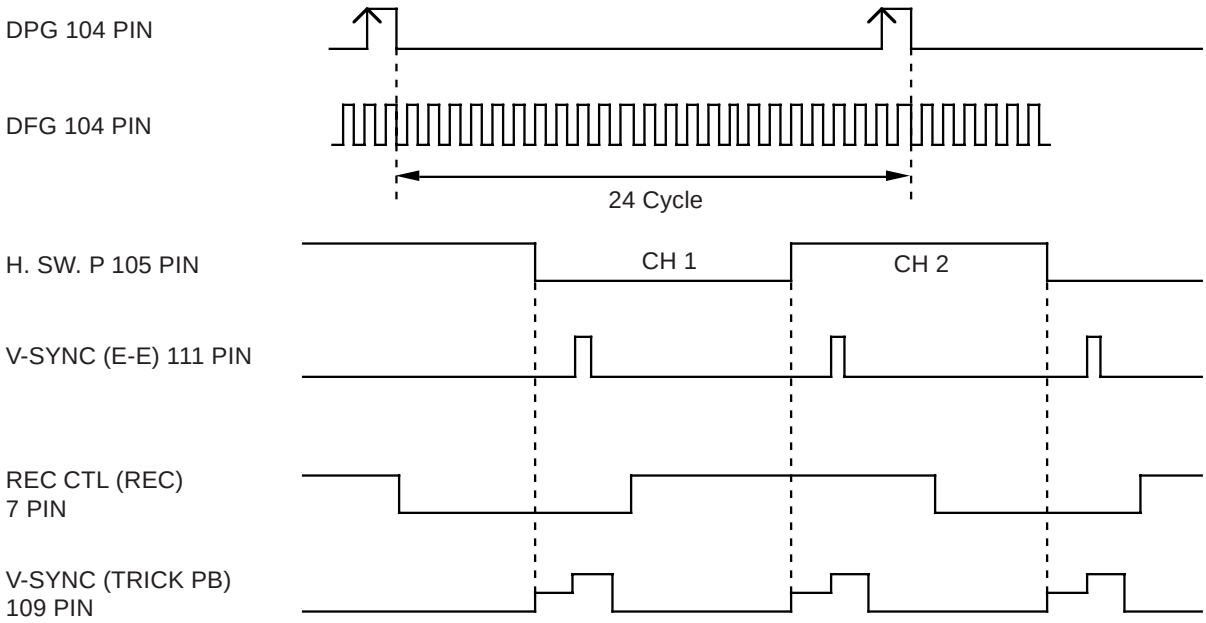

• WAVEFORM CHANGES DEPENDED ON THE TAPE SPEED

MECHANISM TIMING CHART

Please see the list below for the operational timing and the mode sensor output of the main parts on each mechanism modes.

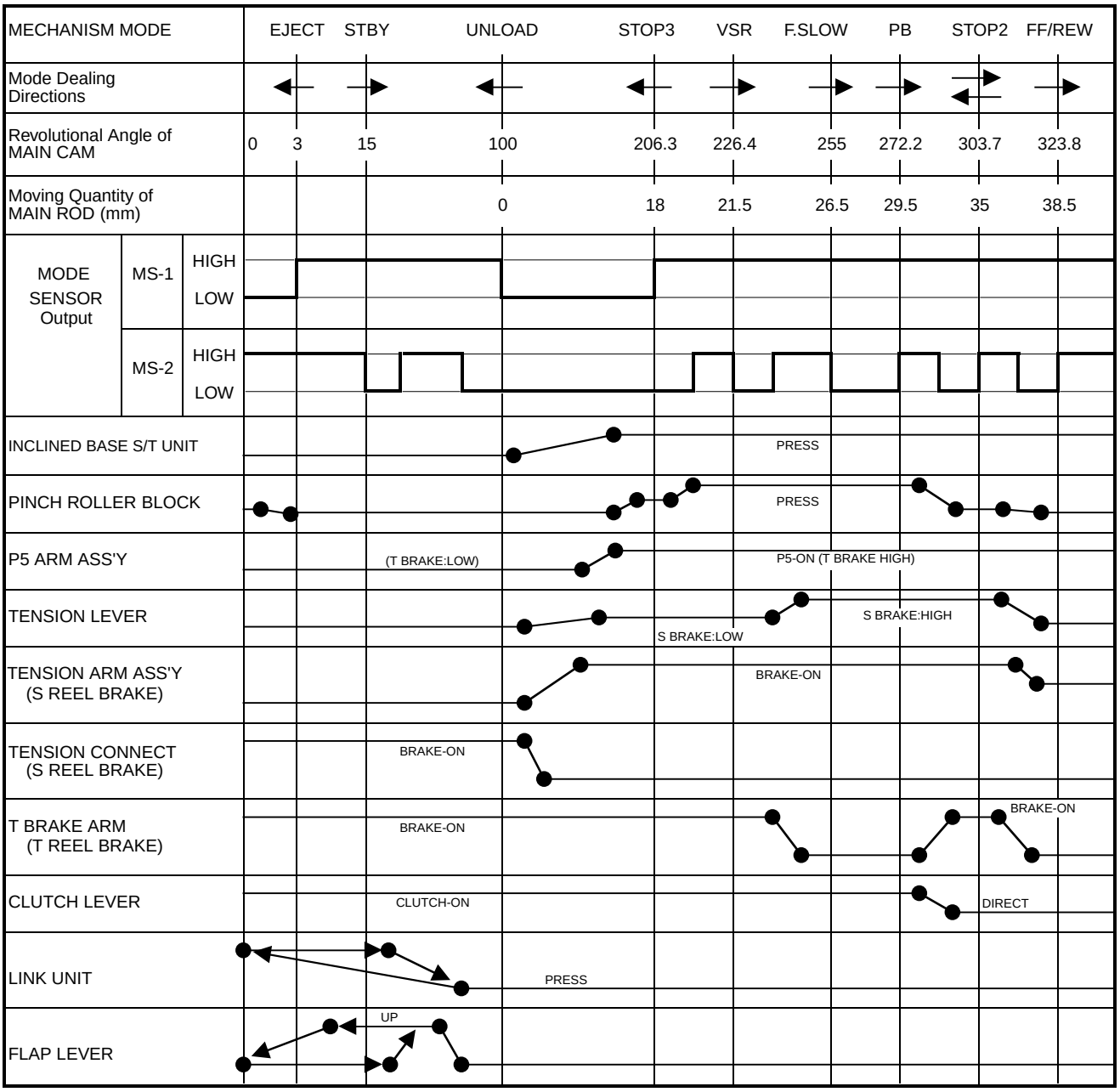

TROUBLESHOOTING GUIDE

(VCR SECTION)

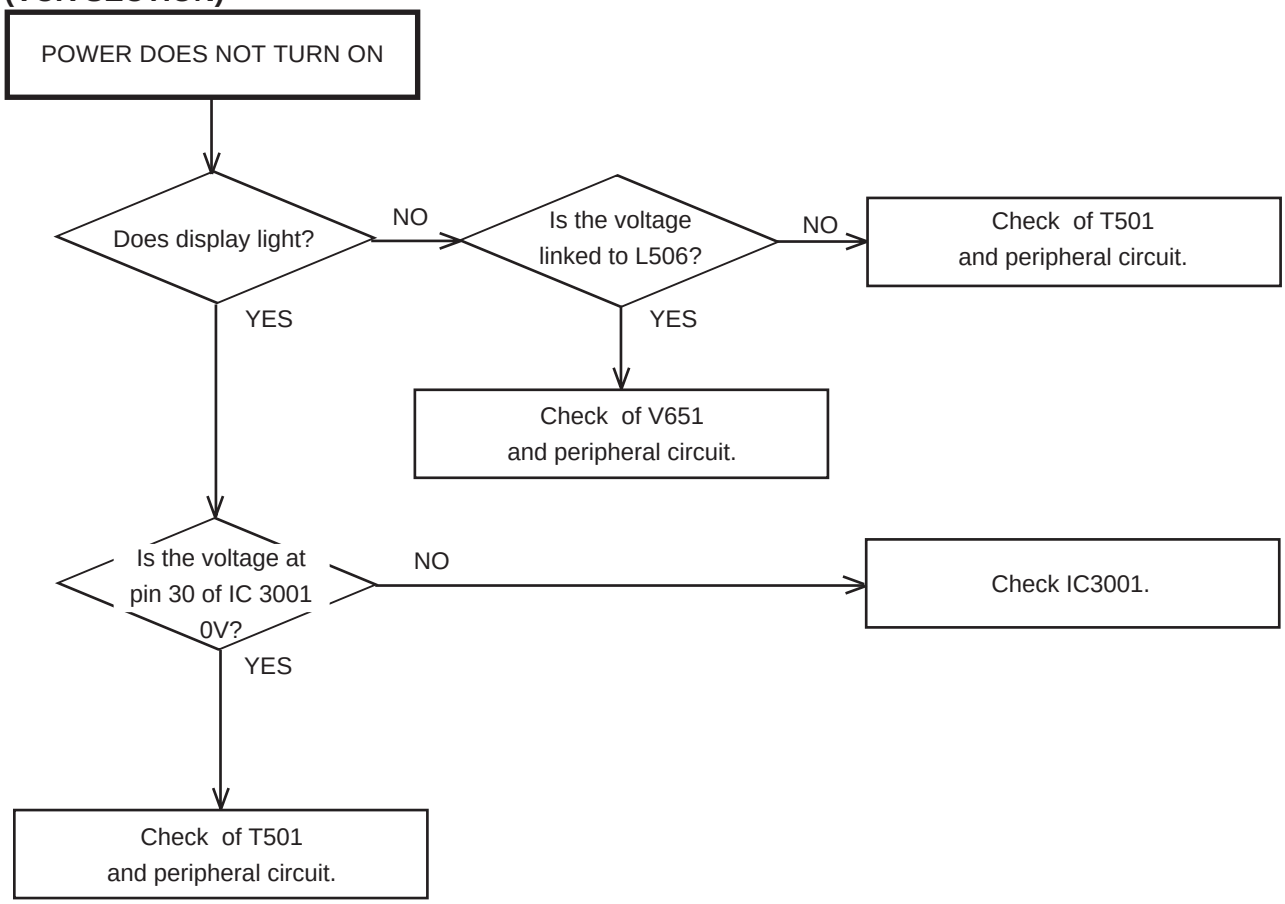

TROUBLESHOOTING GUIDE

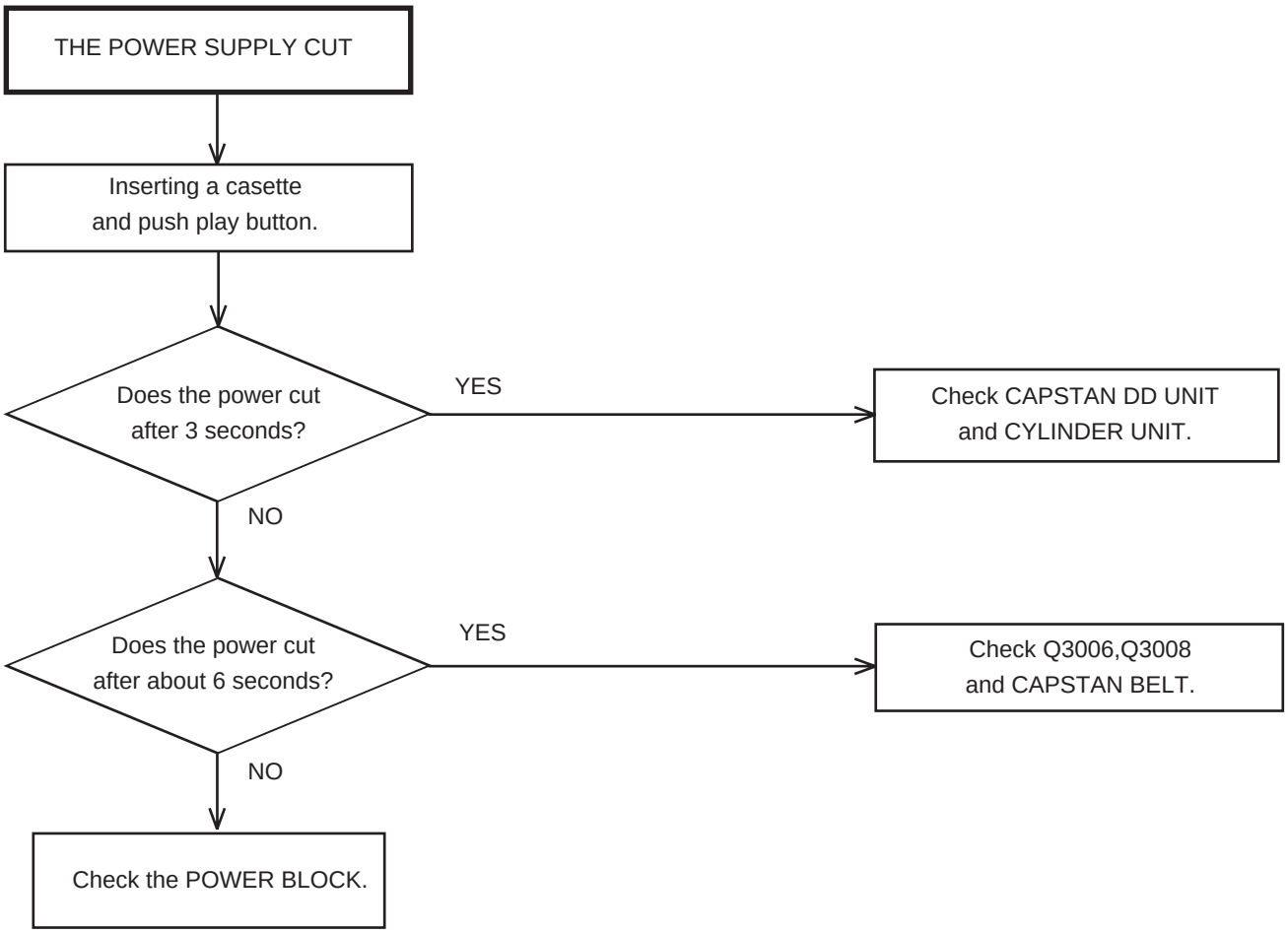

TROUBLESHOOTING GUIDE

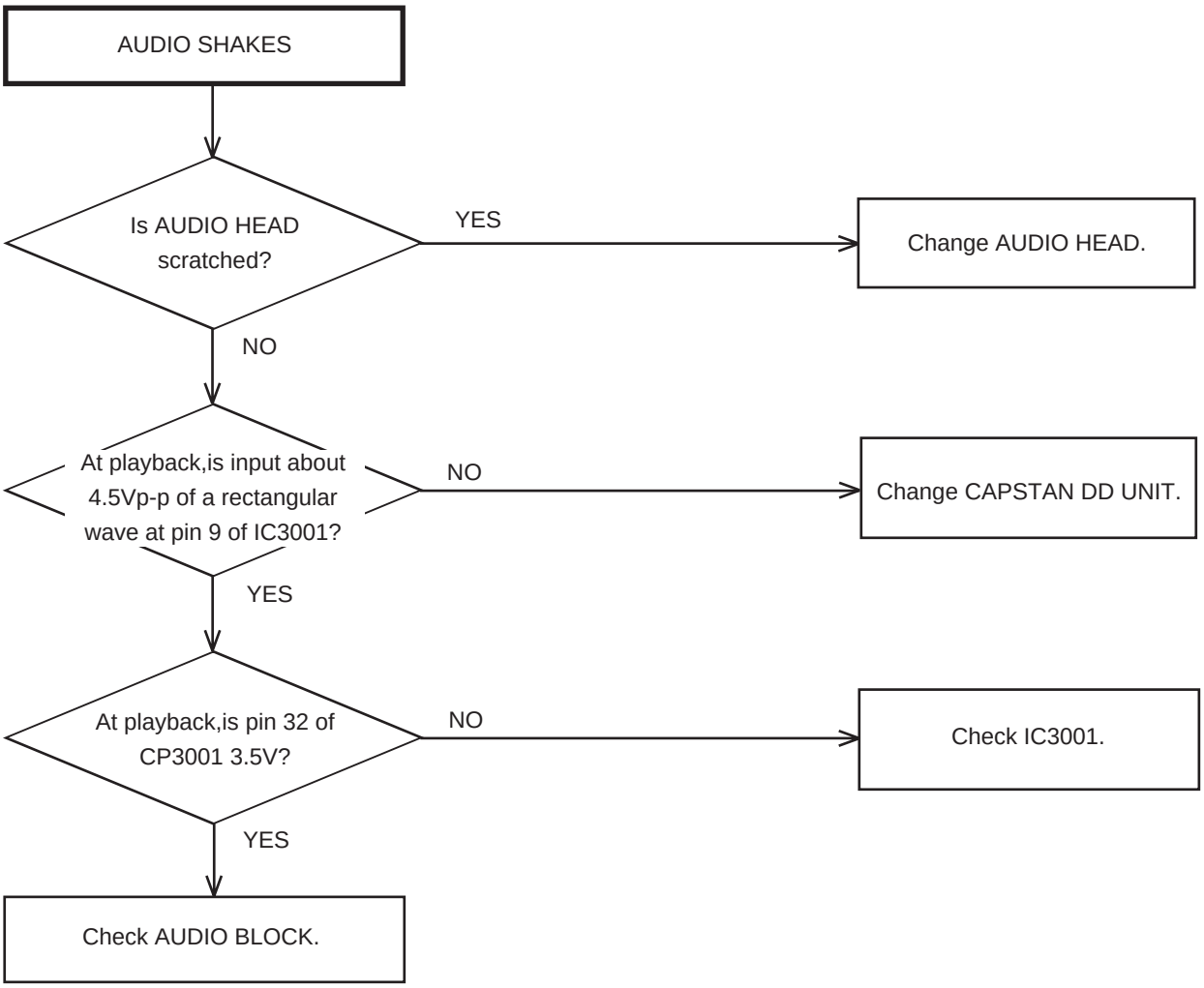

TROUBLESHOOTING GUIDE

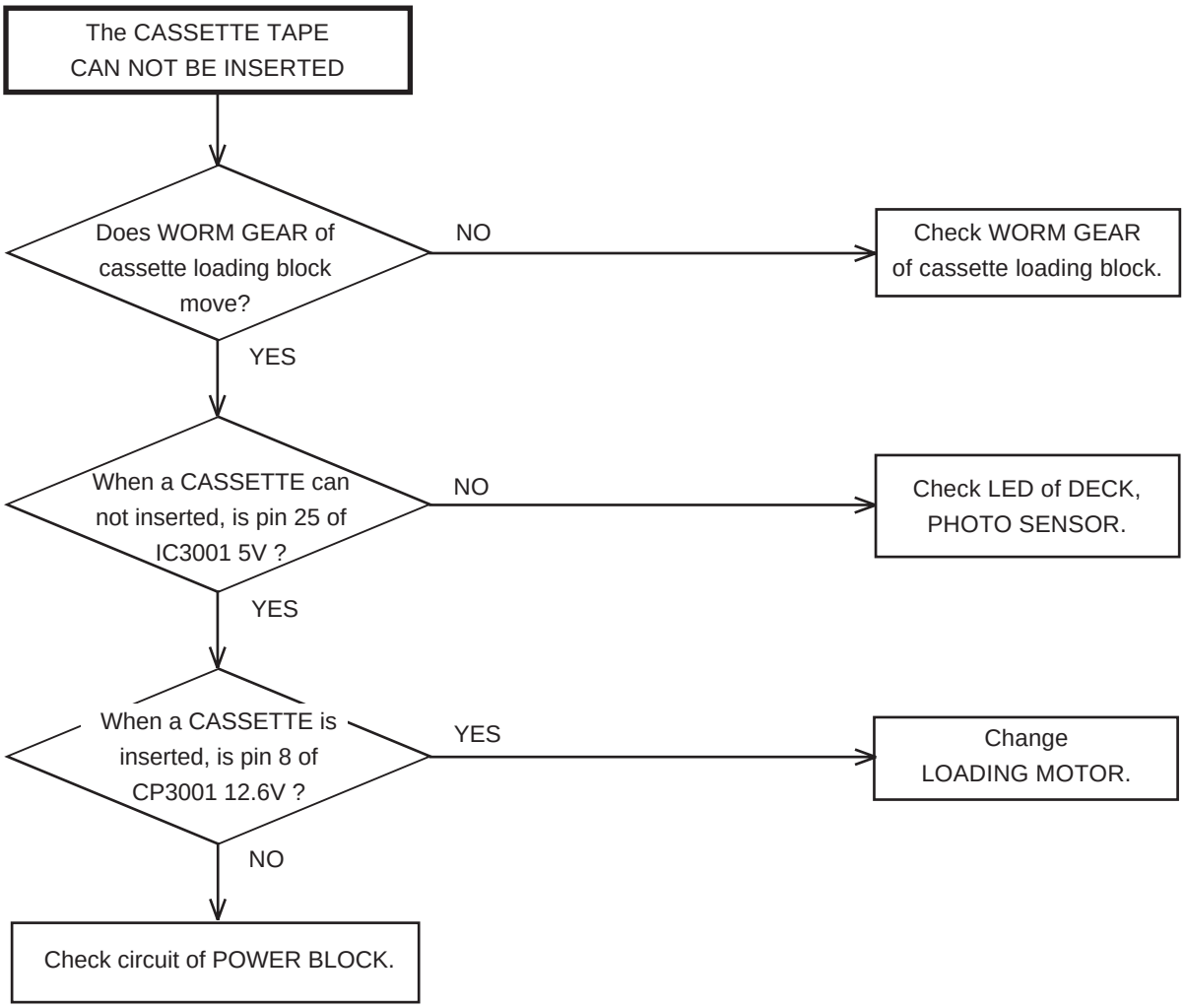

TROUBLESHOOTING GUIDE

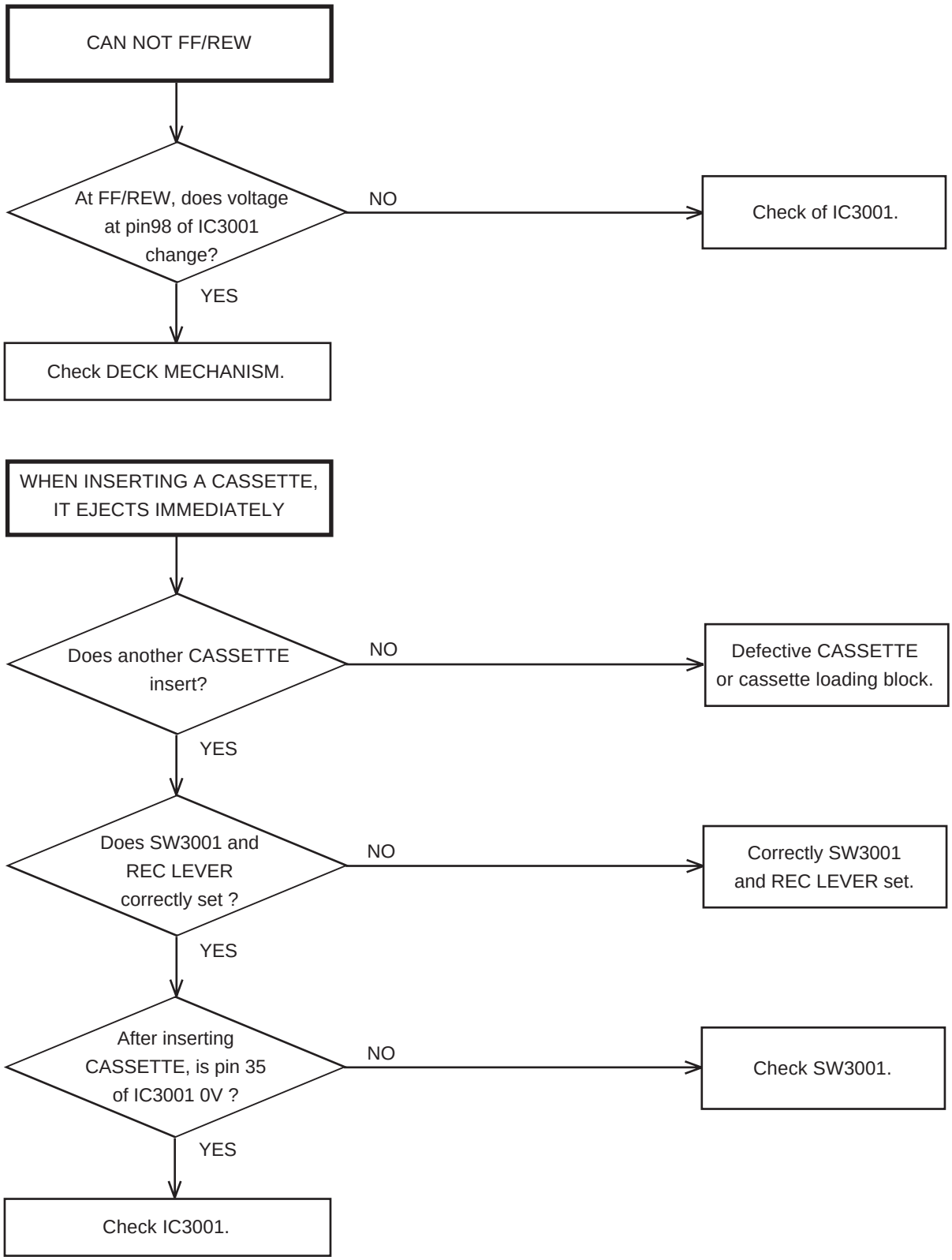

TROUBLESHOOTING GUIDE

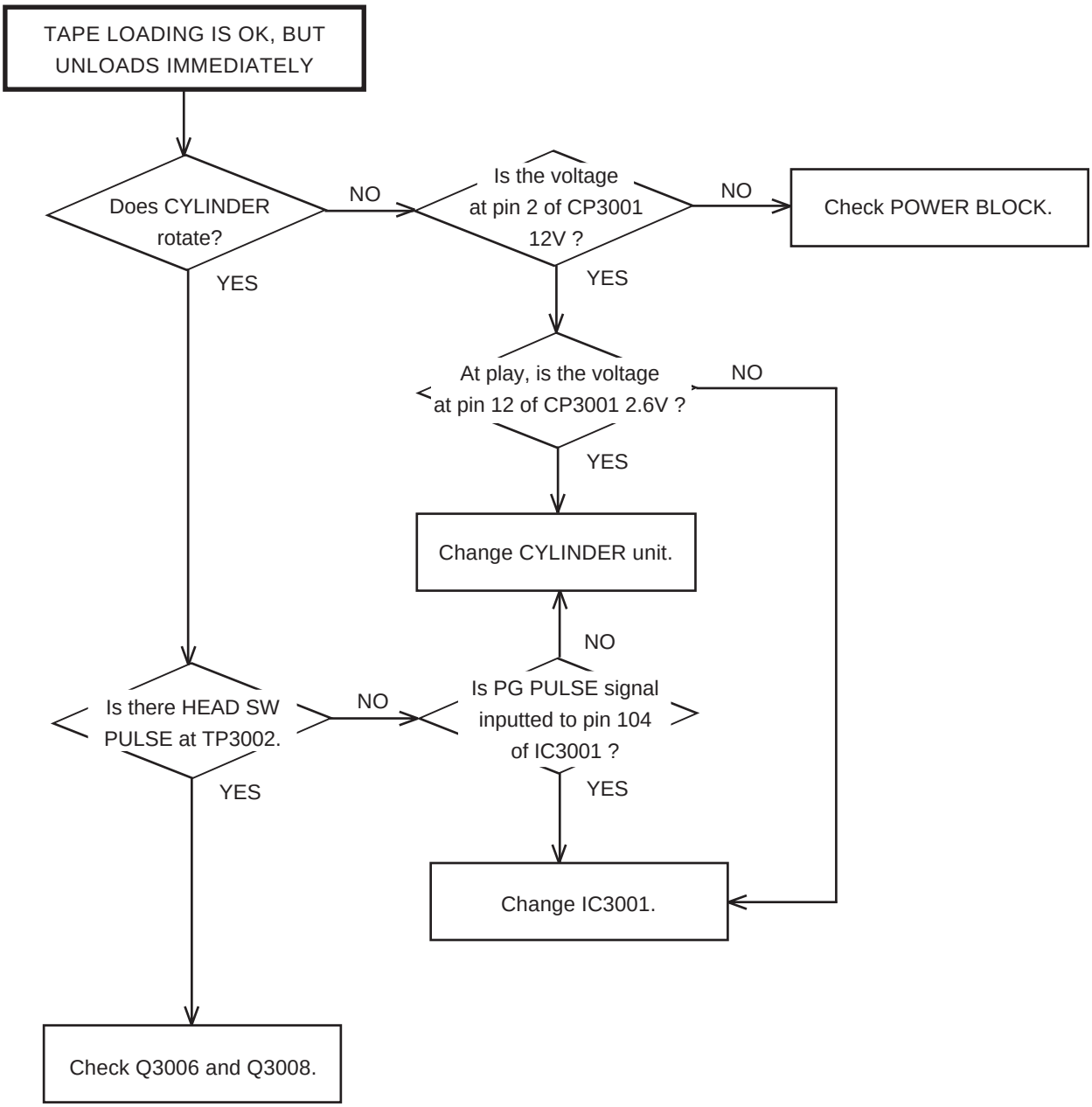

TROUBLESHOOTING GUIDE

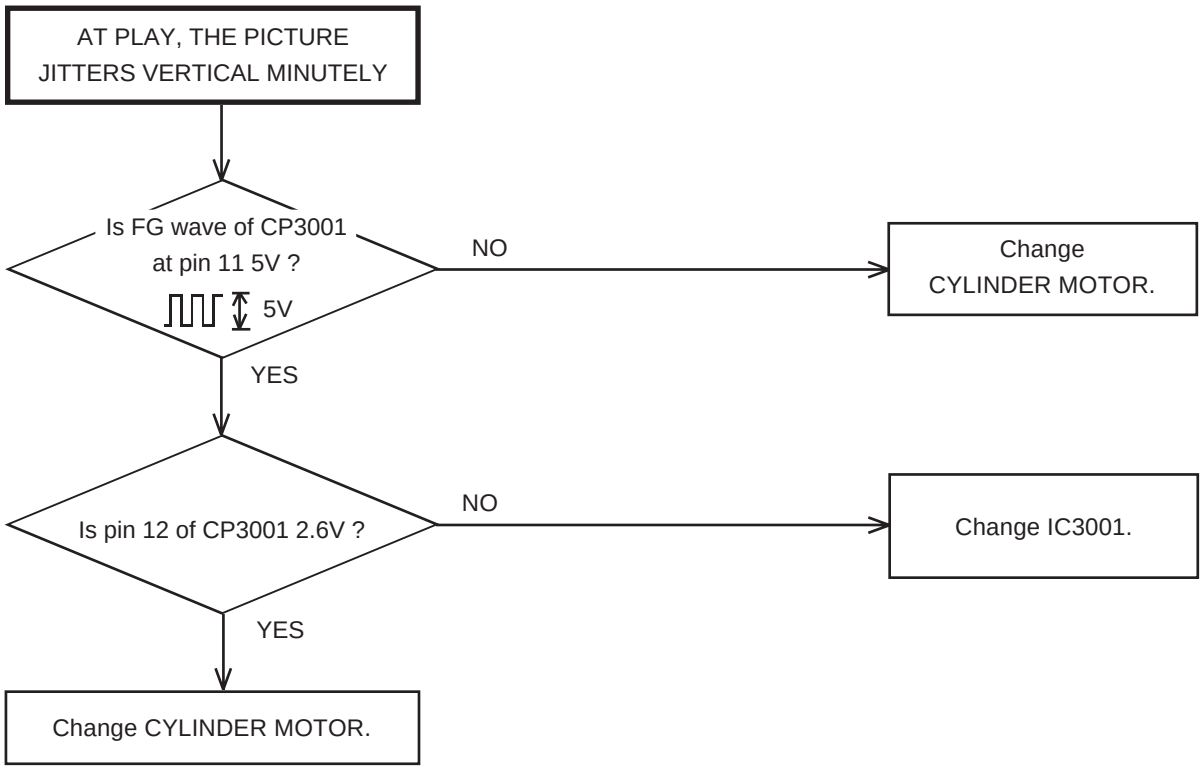

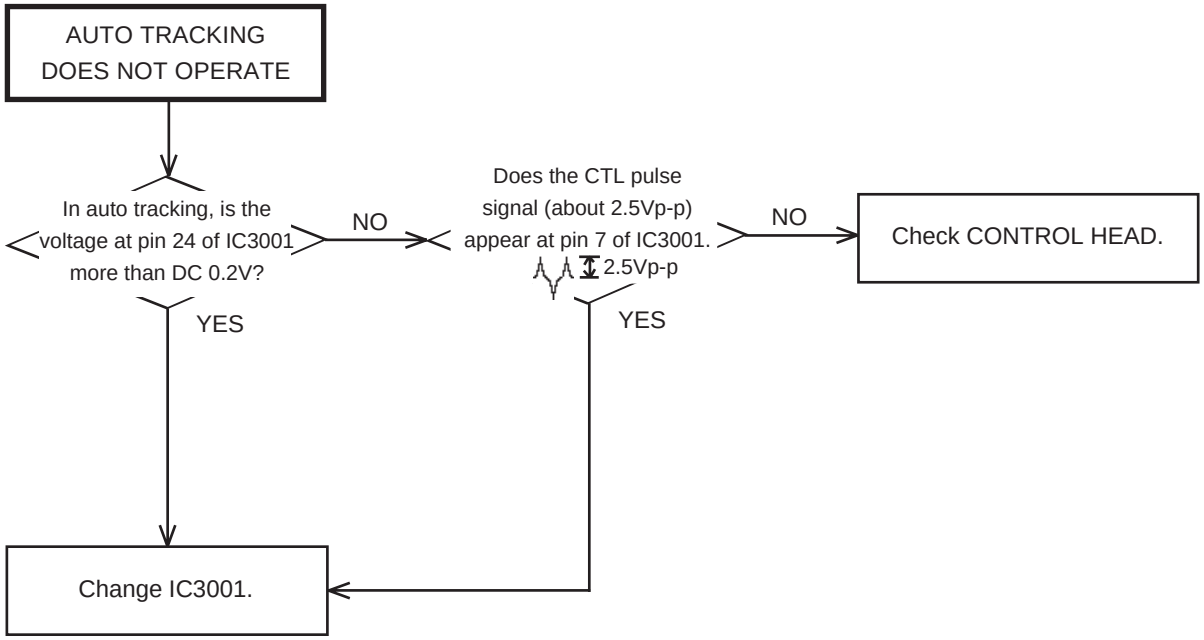

TROUBLESHOOTING GUIDE

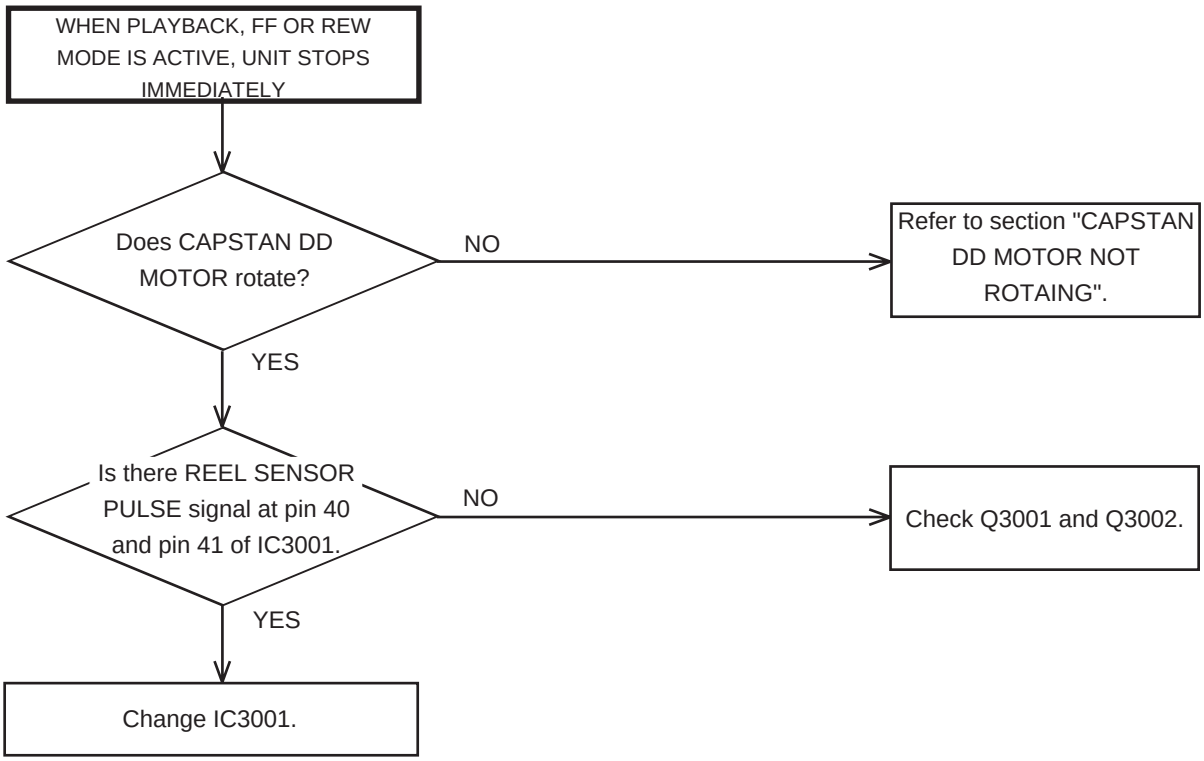

TROUBLESHOOTING GUIDE

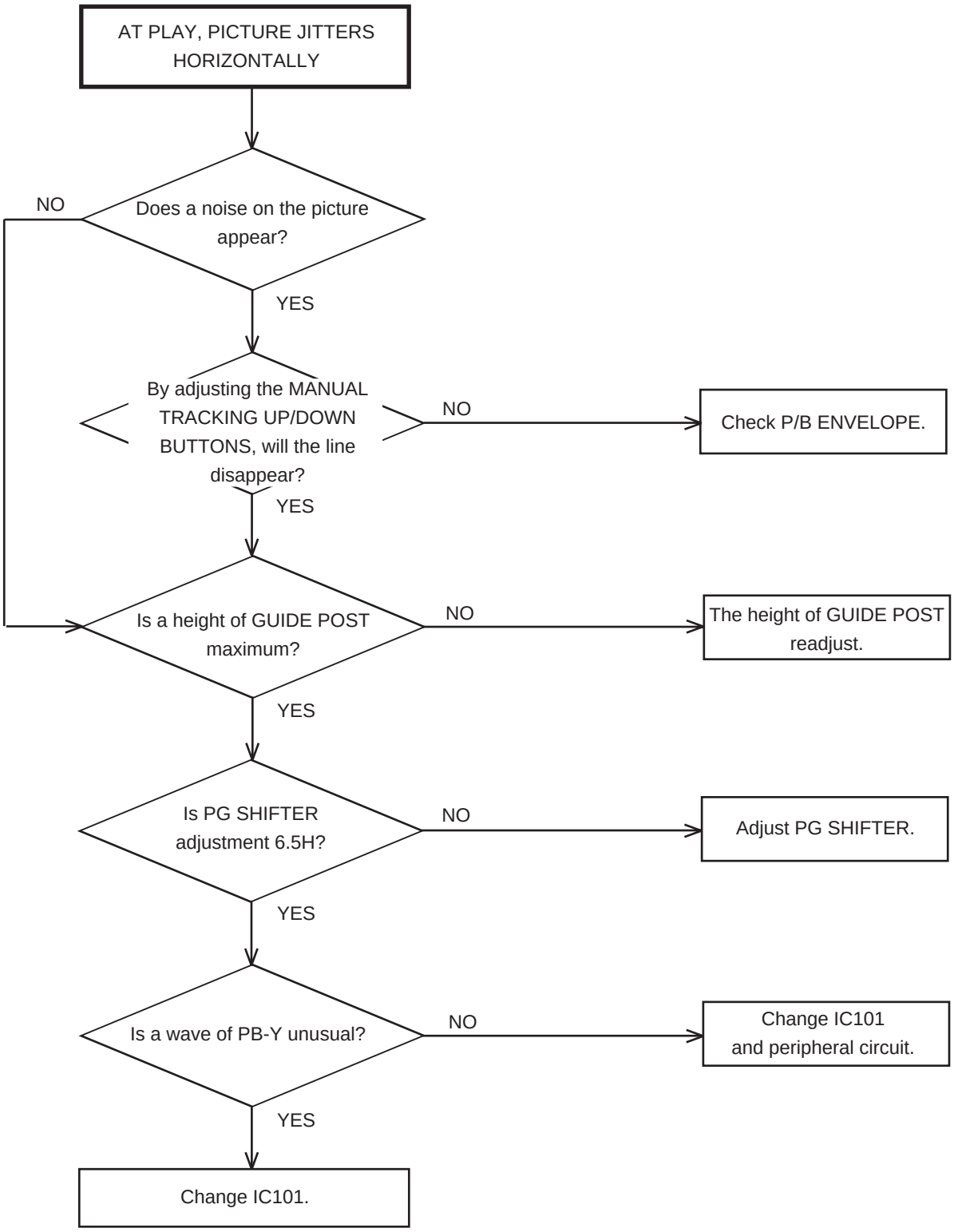

TROUBLESHOOTING GUIDE

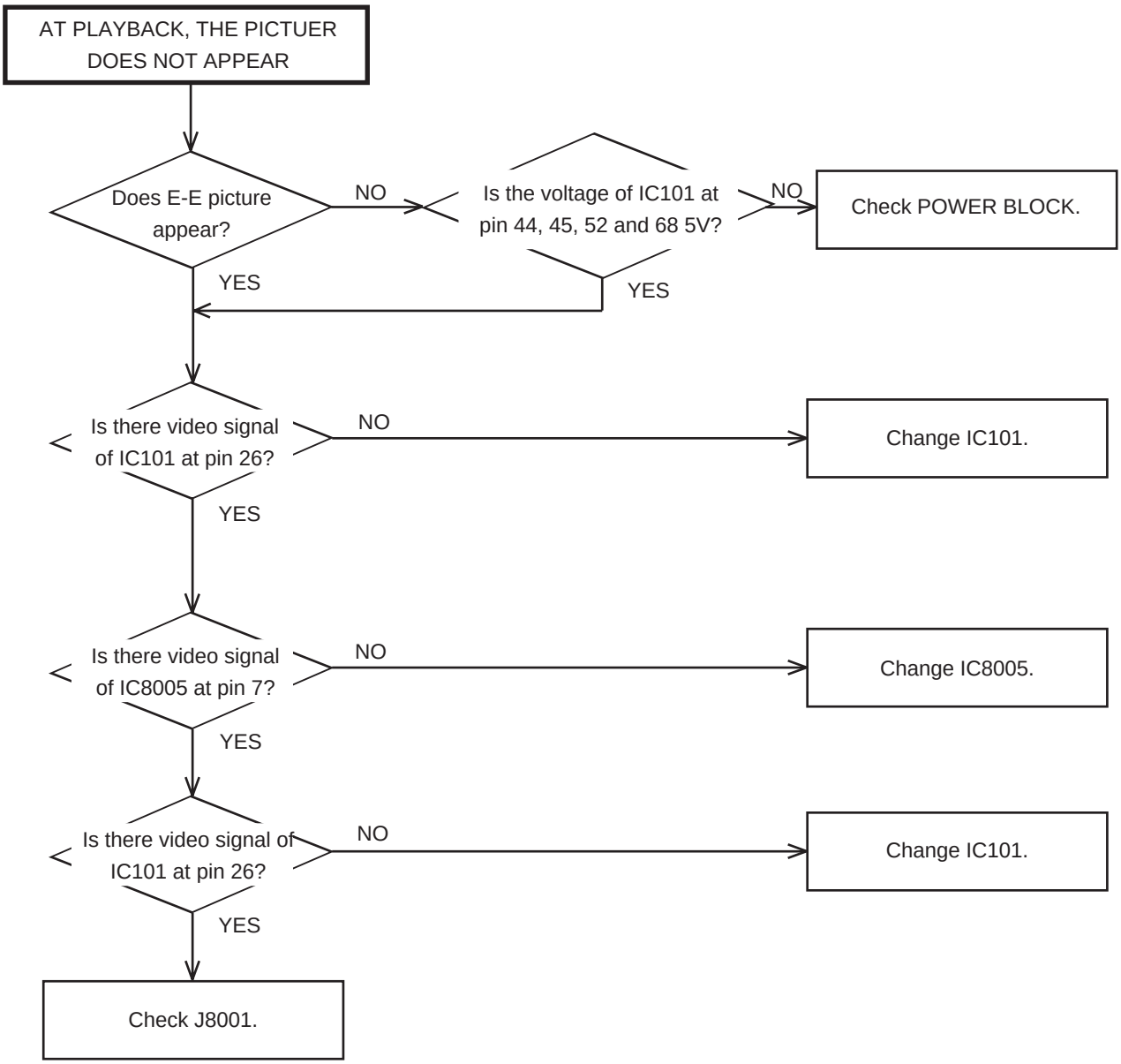

TROUBLESHOOTING GUIDE

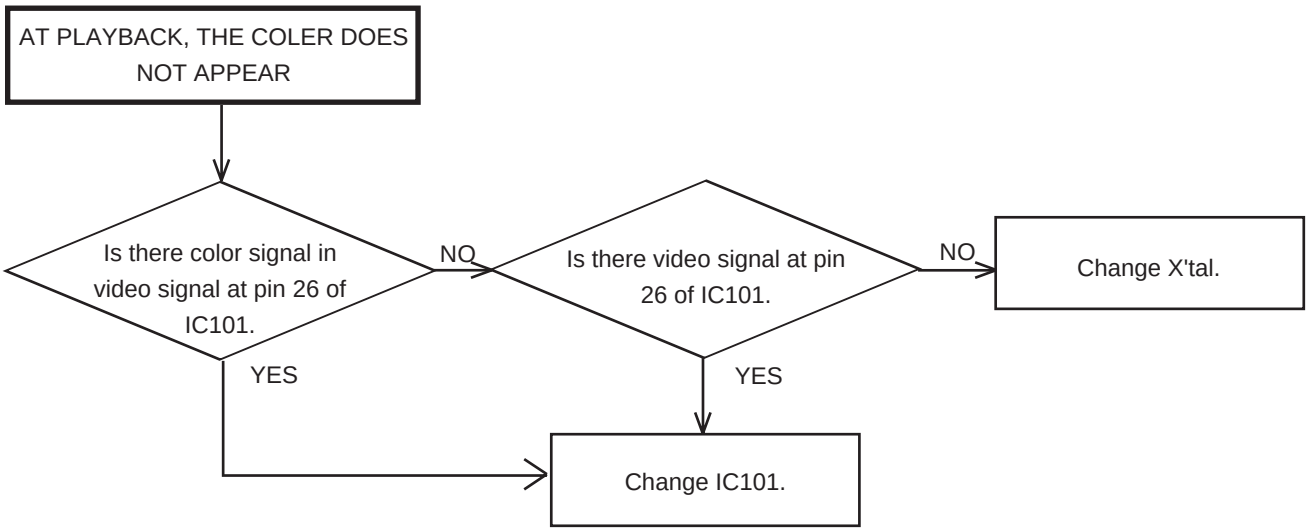

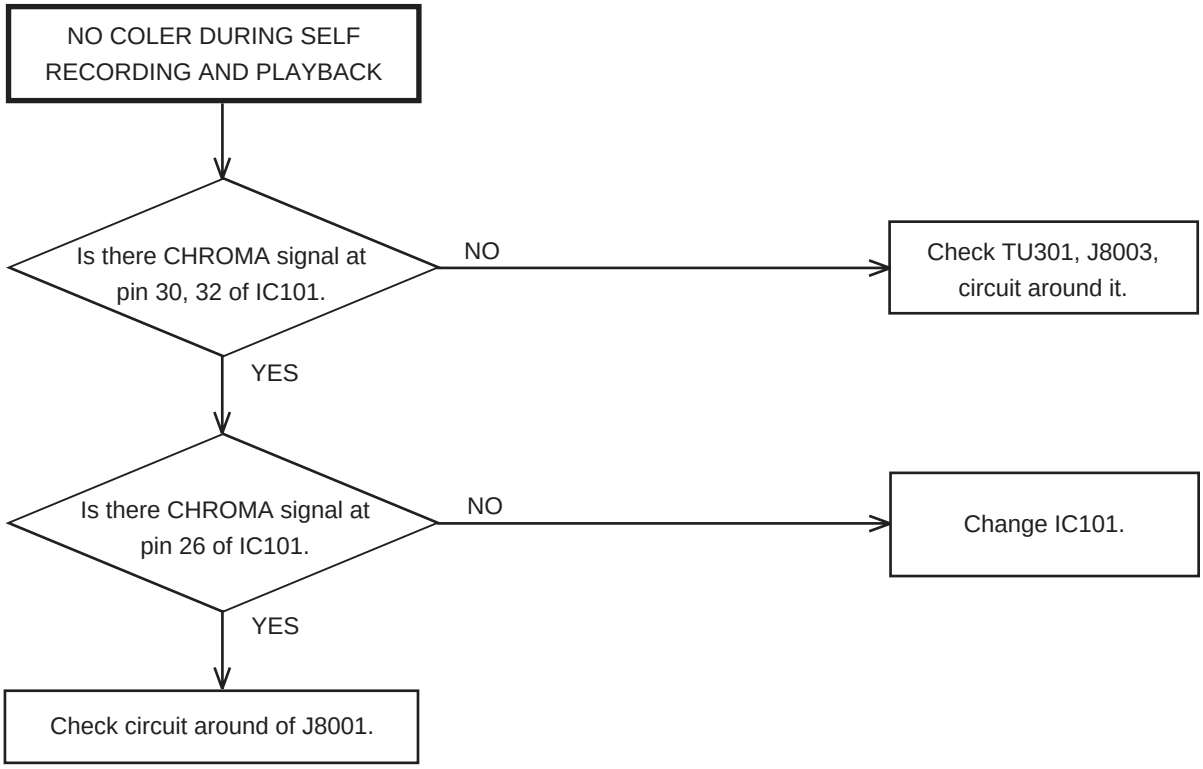

TROUBLESHOOTING GUIDE

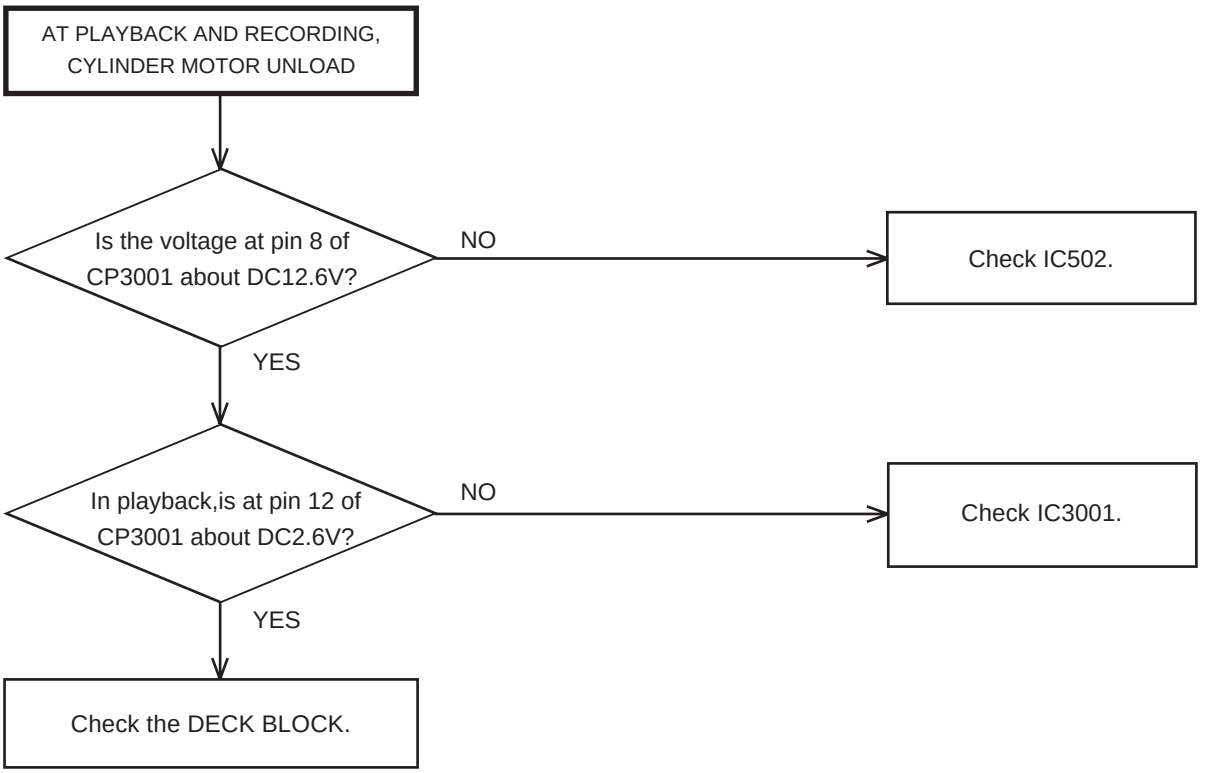

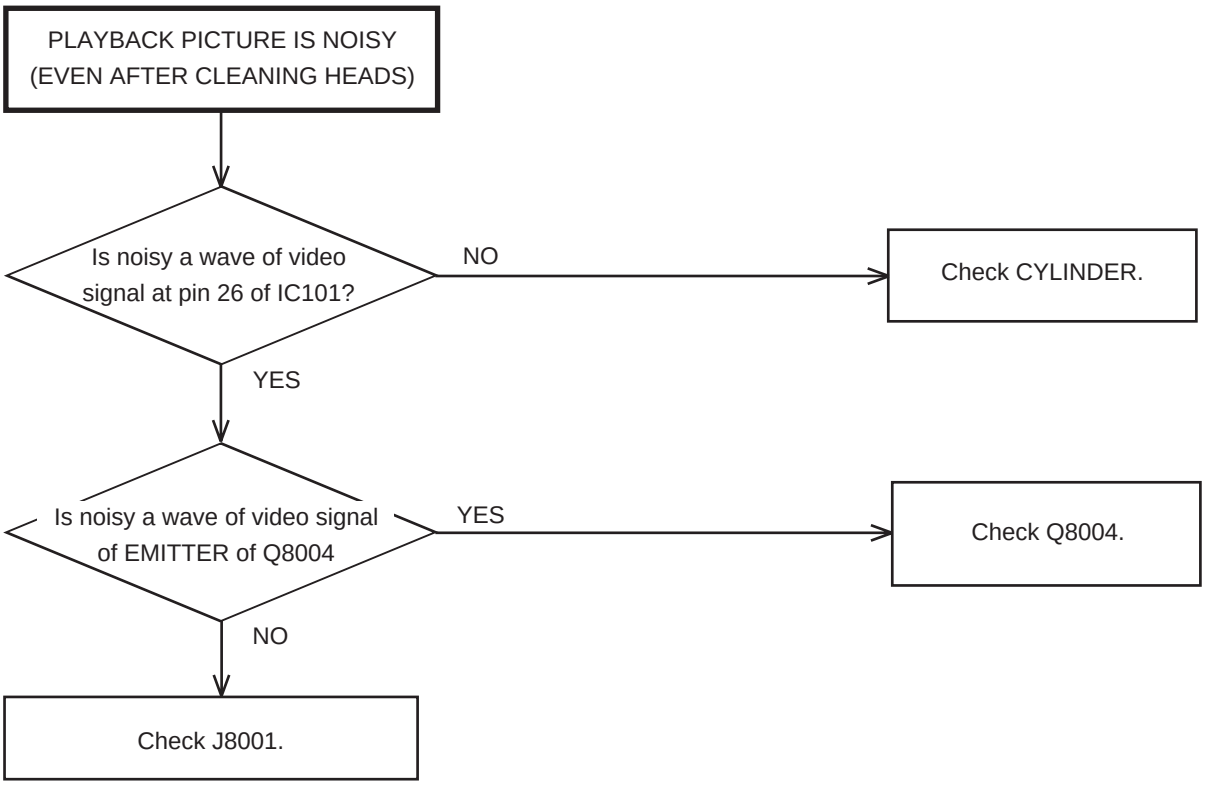

TROUBLESHOOTING GUIDE

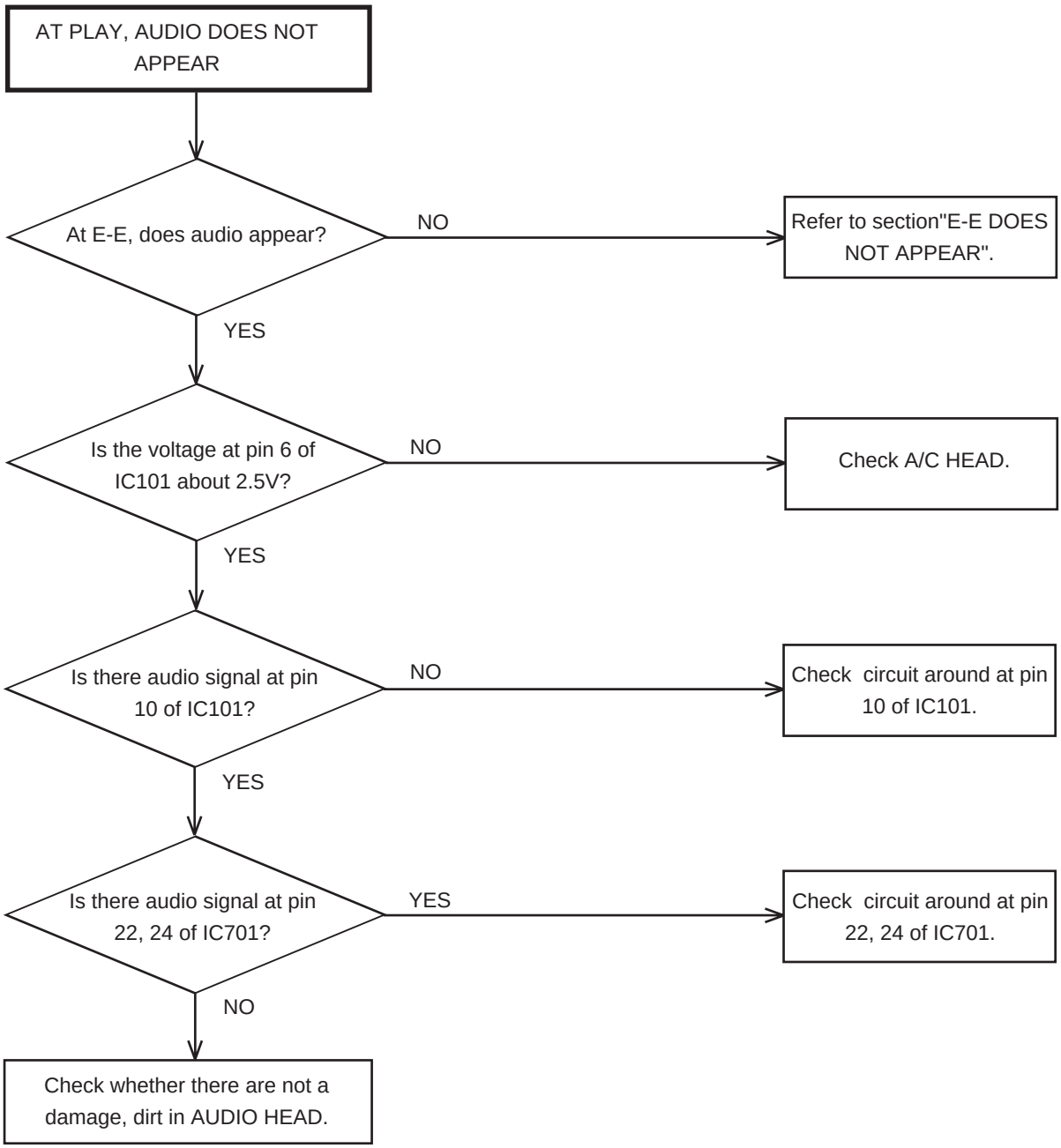

TROUBLESHOOTING GUIDE

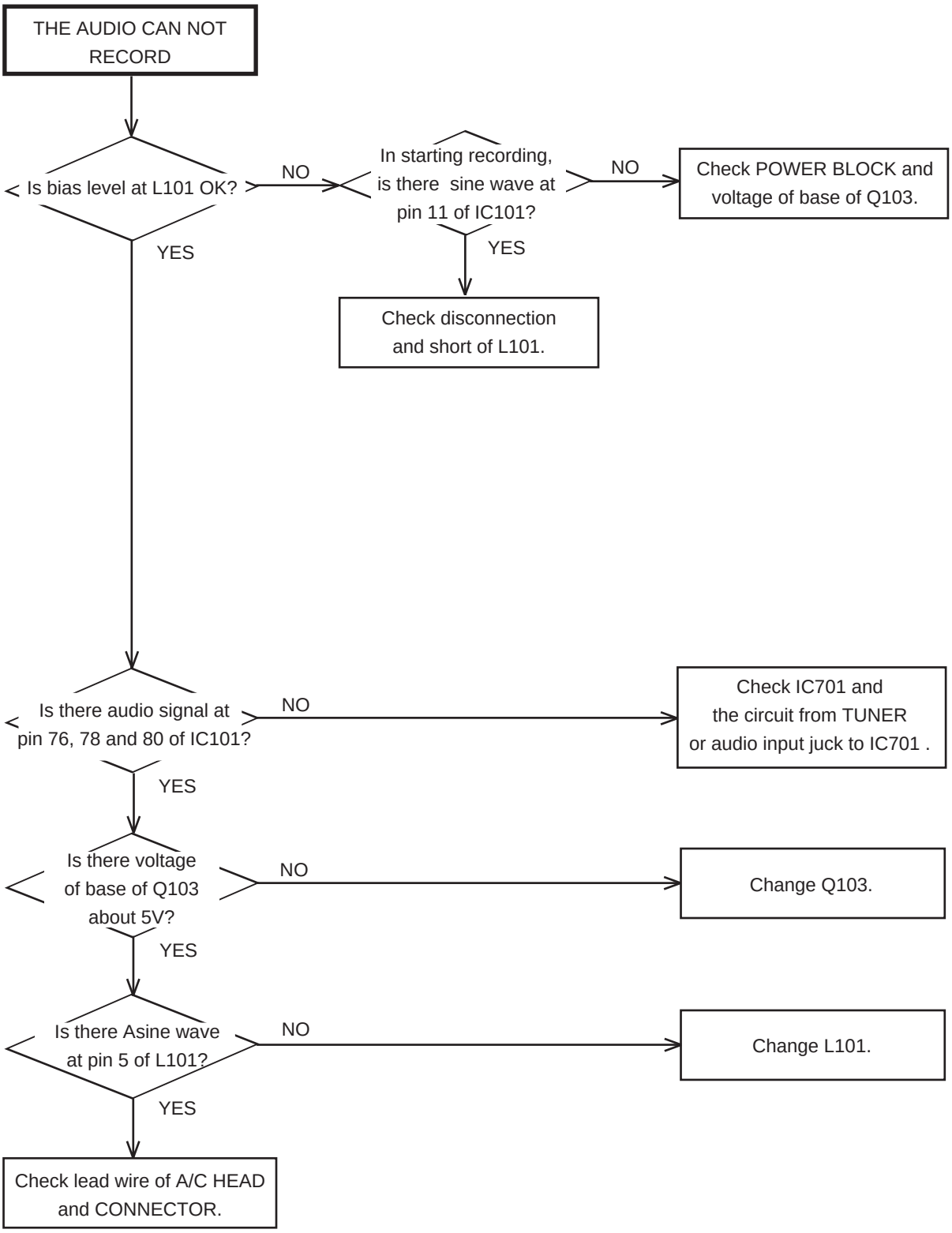

TROUBLESHOOTING GUIDE

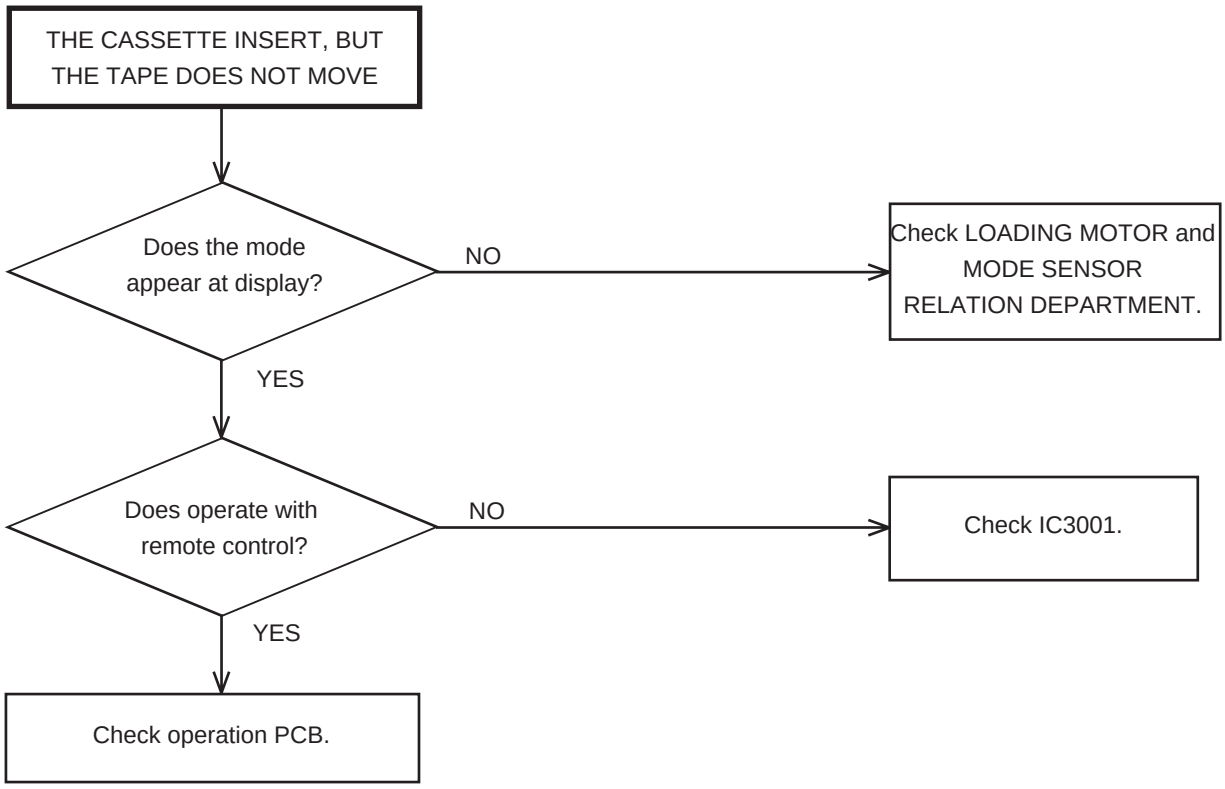

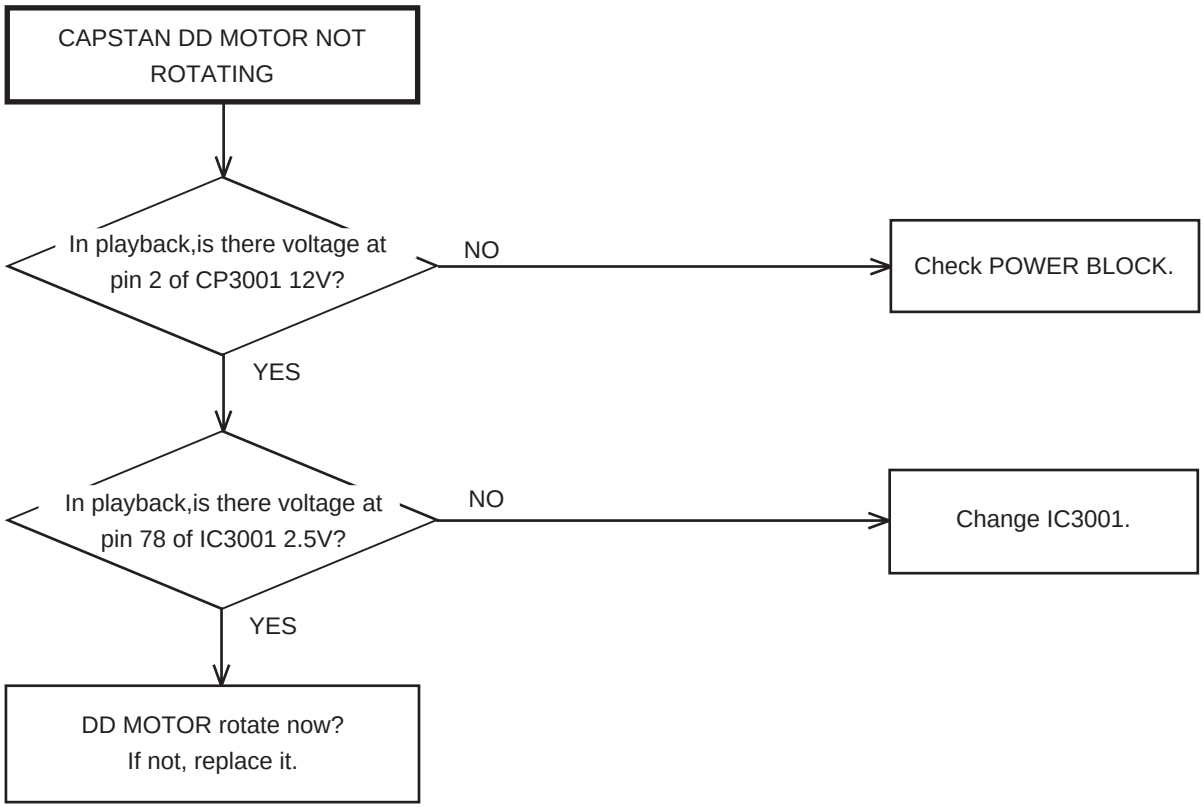

TROUBLESHOOTING GUIDE

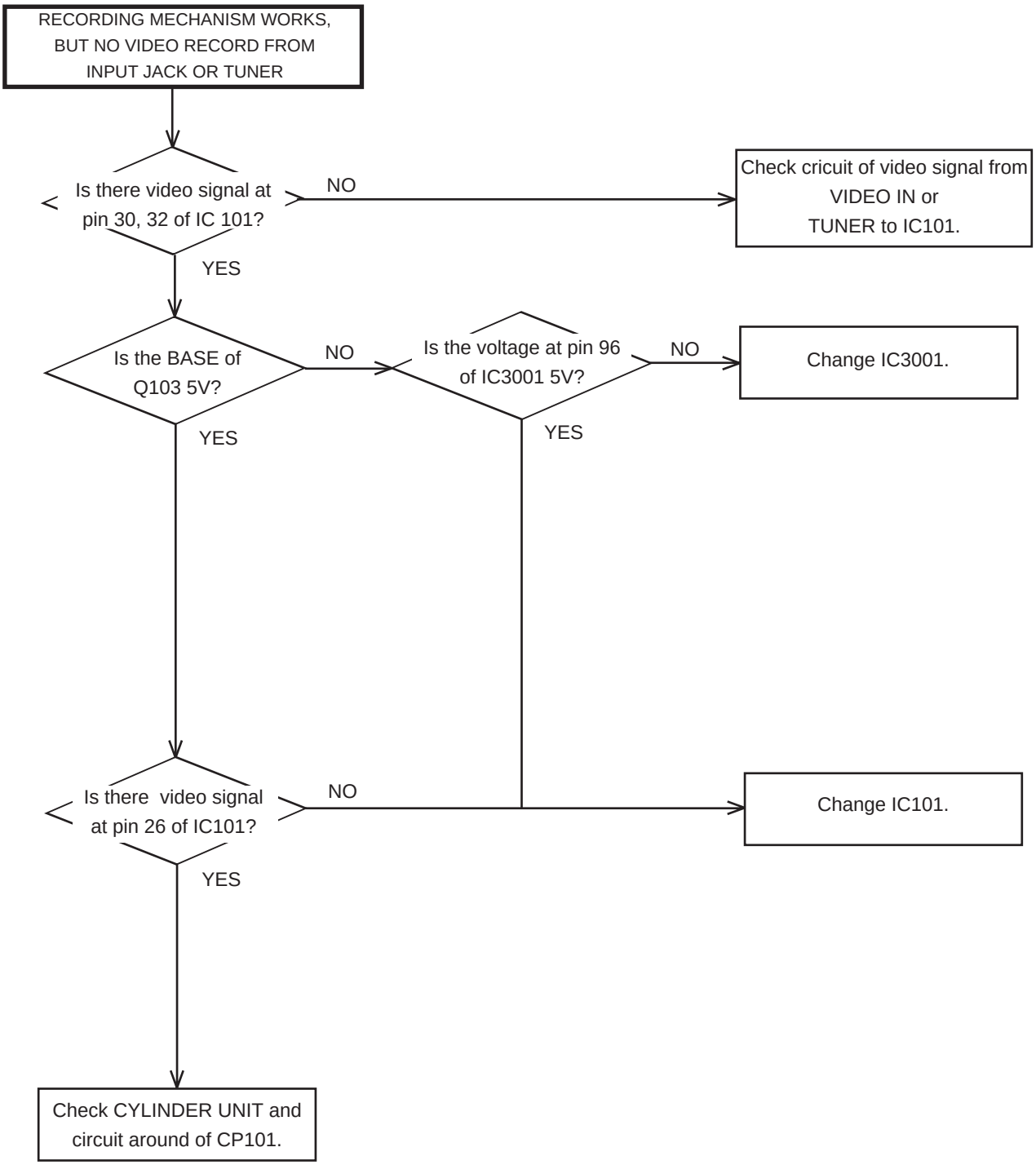

TROUBLESHOOTING GUIDE

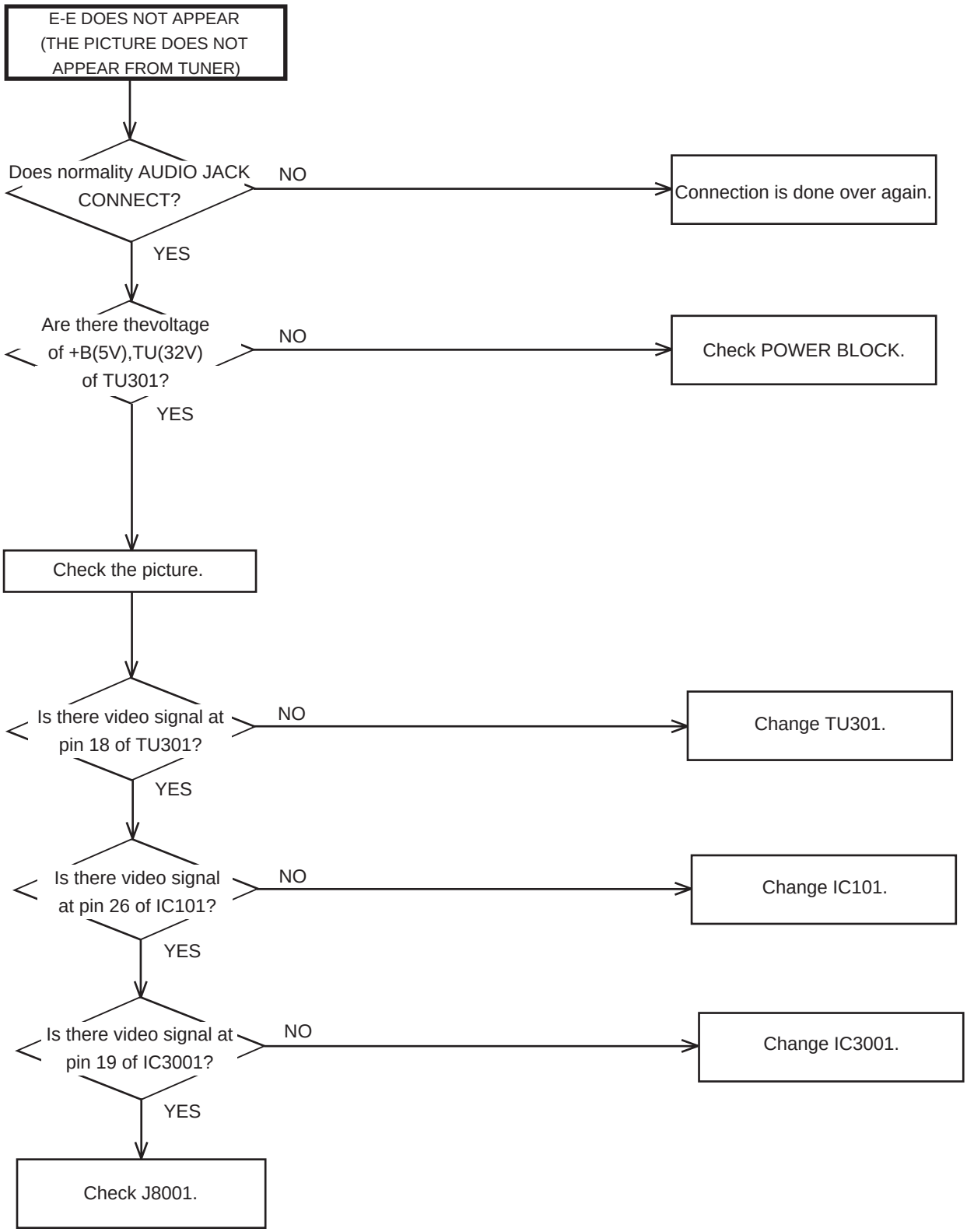

TROUBLESHOOTING GUIDE

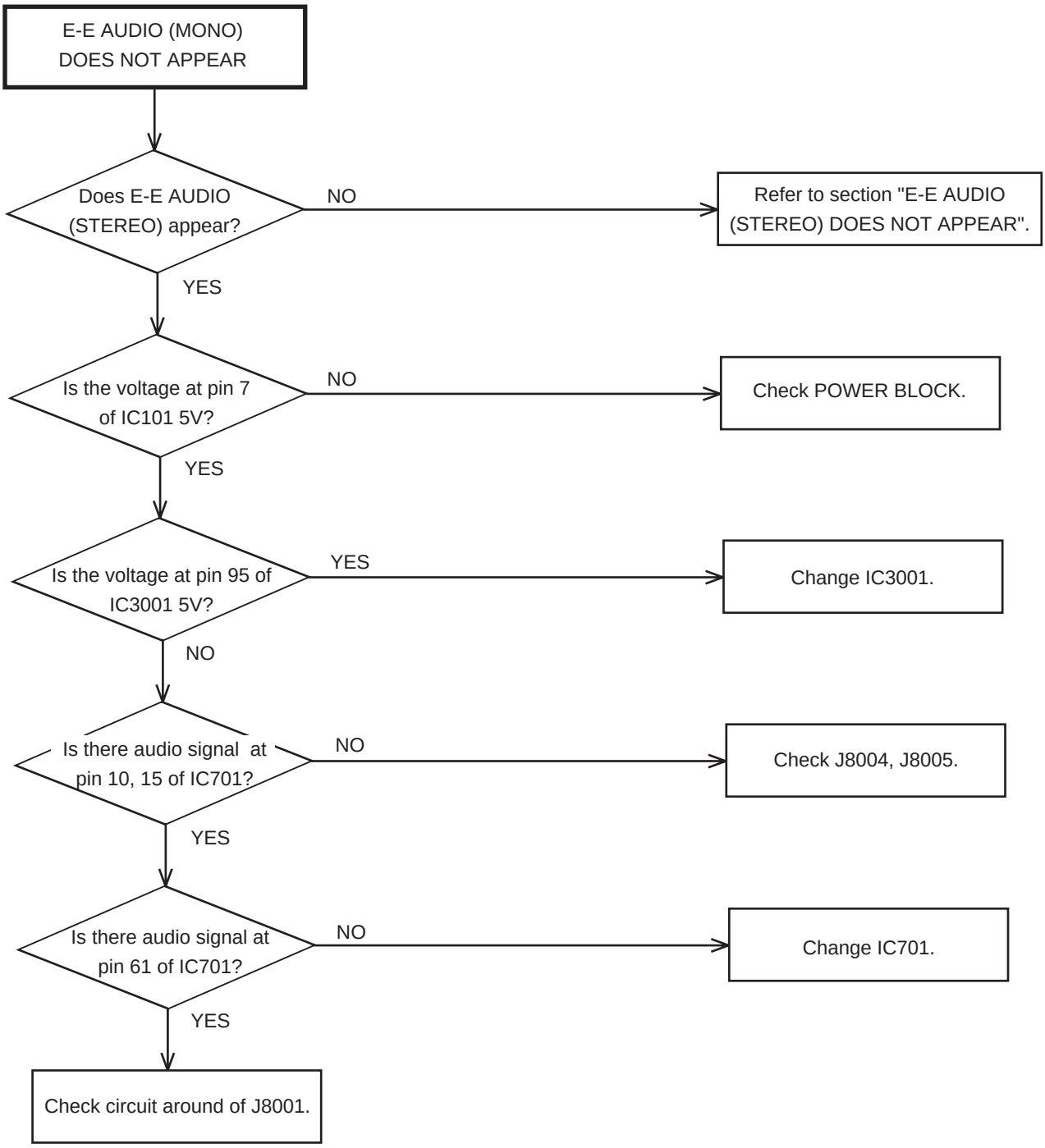

TROUBLESHOOTING GUIDE

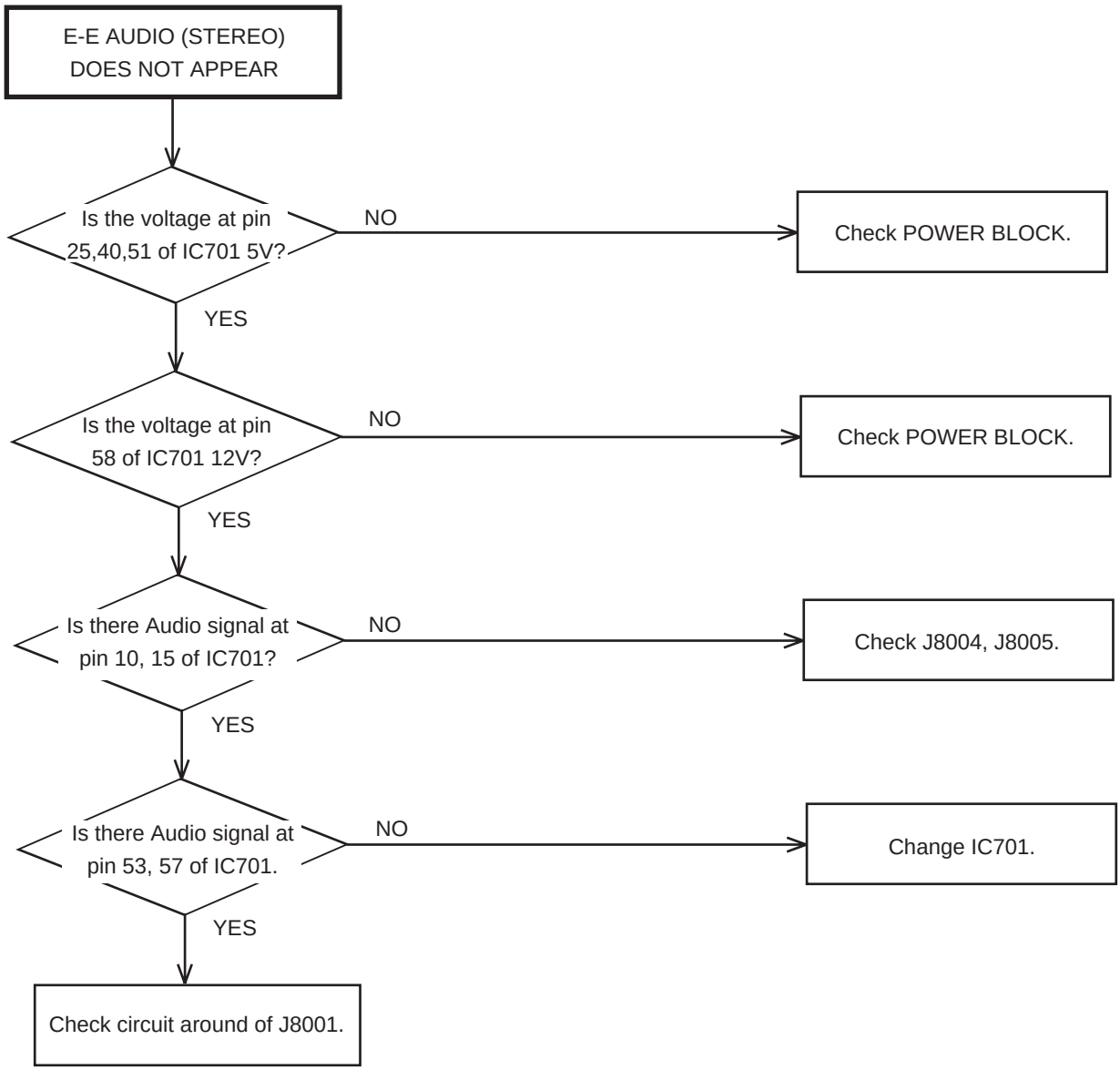

TROUBLESHOOTING GUIDE

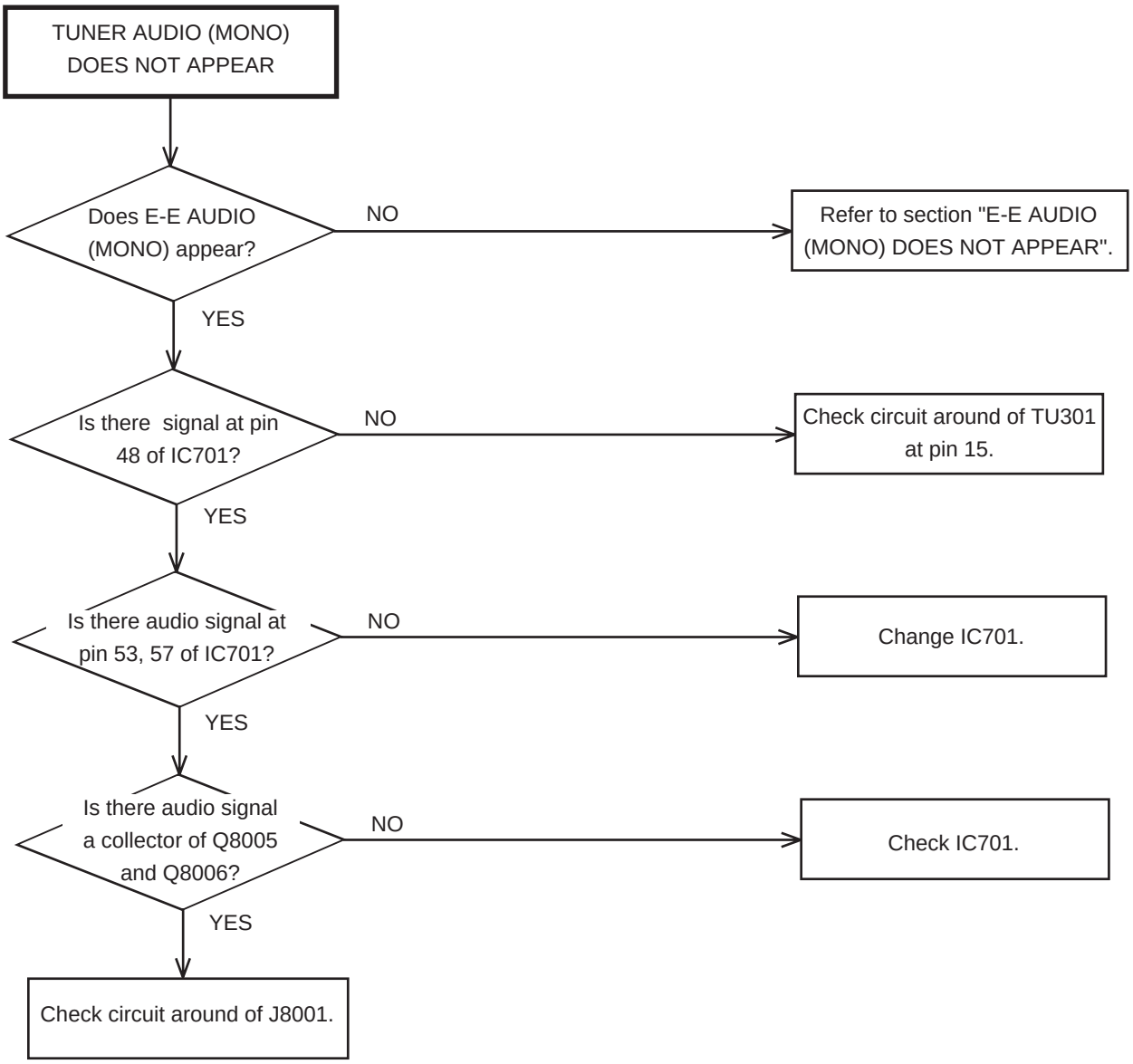

TROUBLESHOOTING GUIDE

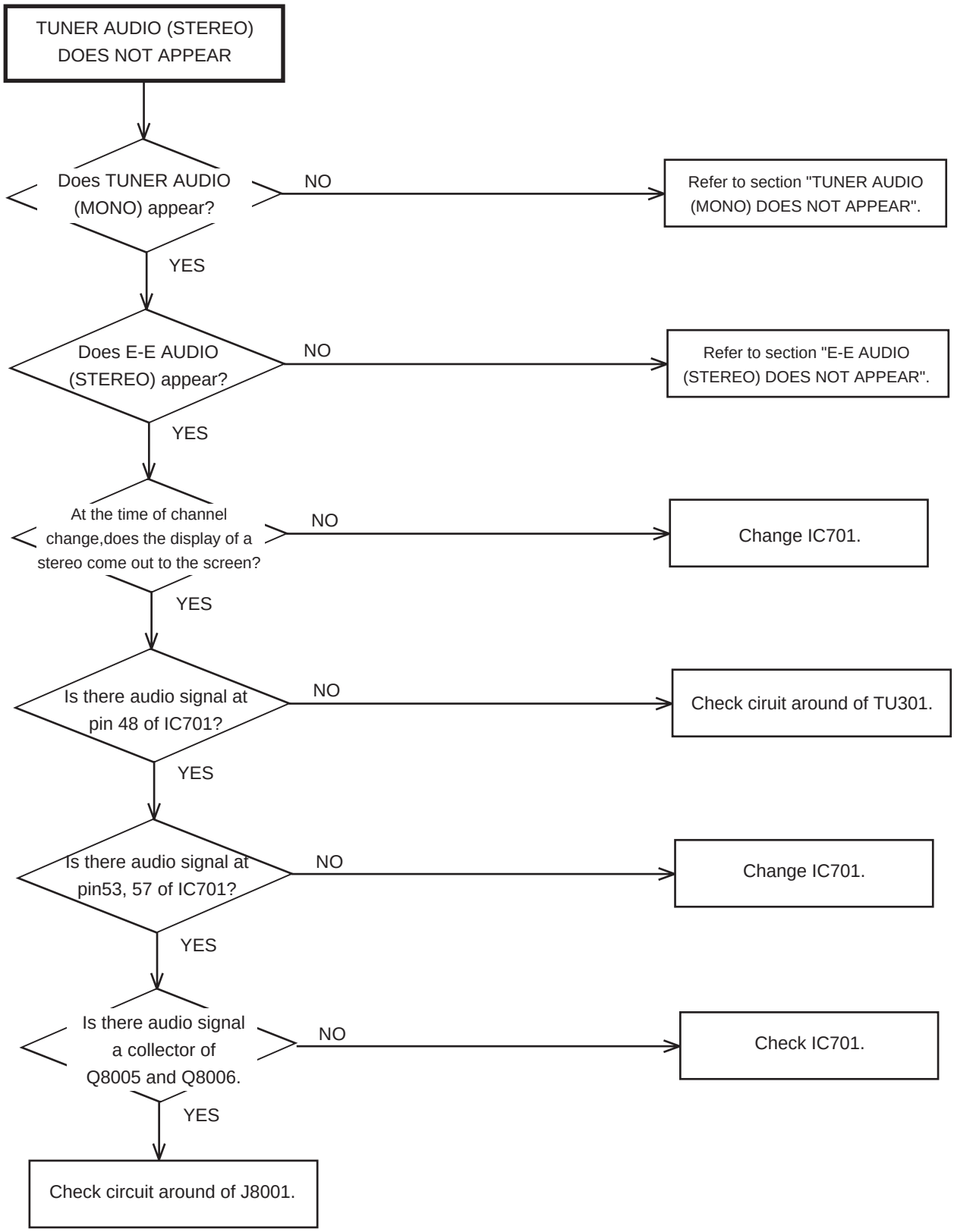

TROUBLESHOOTING GUIDE

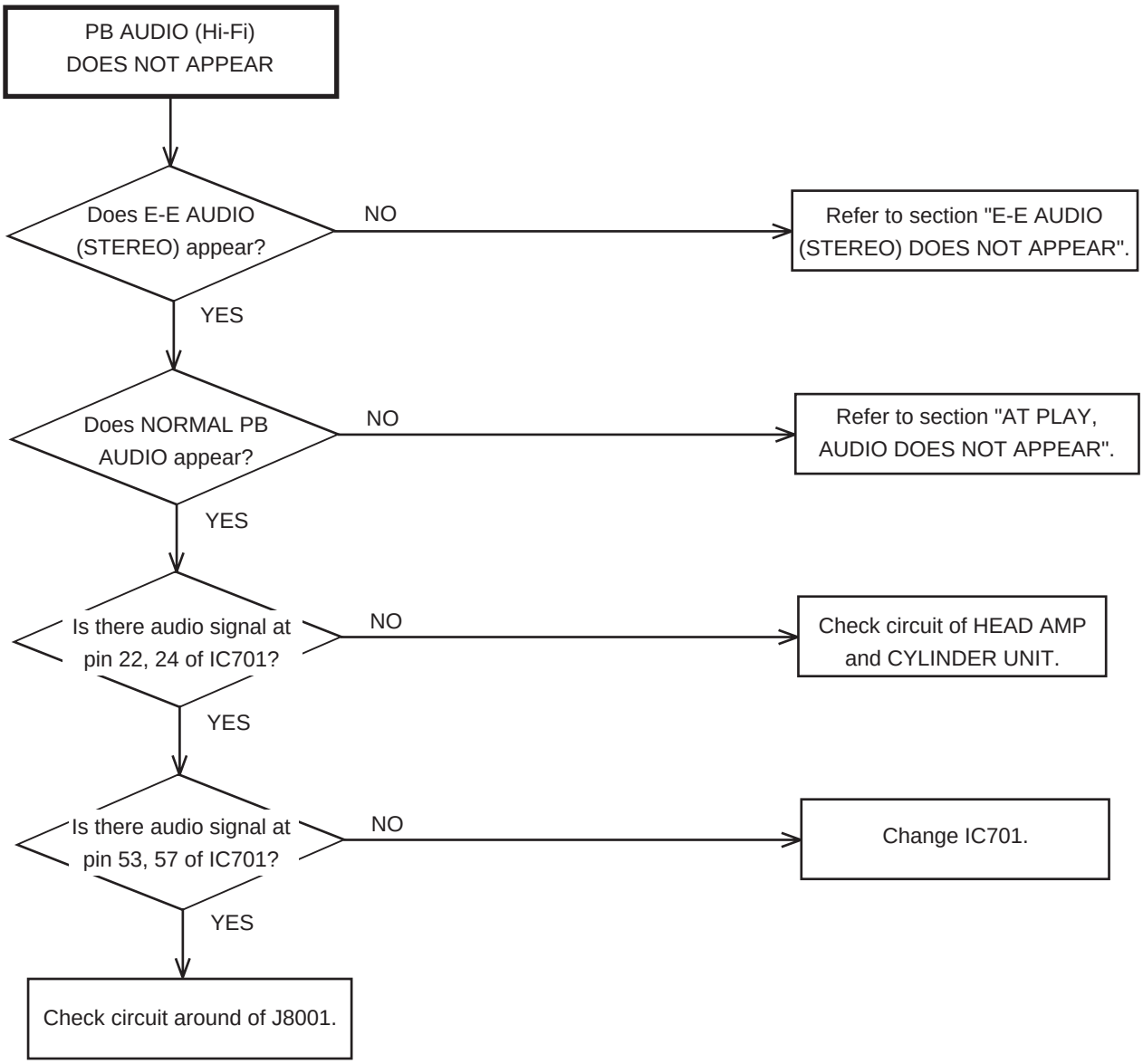

TROUBLESHOOTING GUIDE

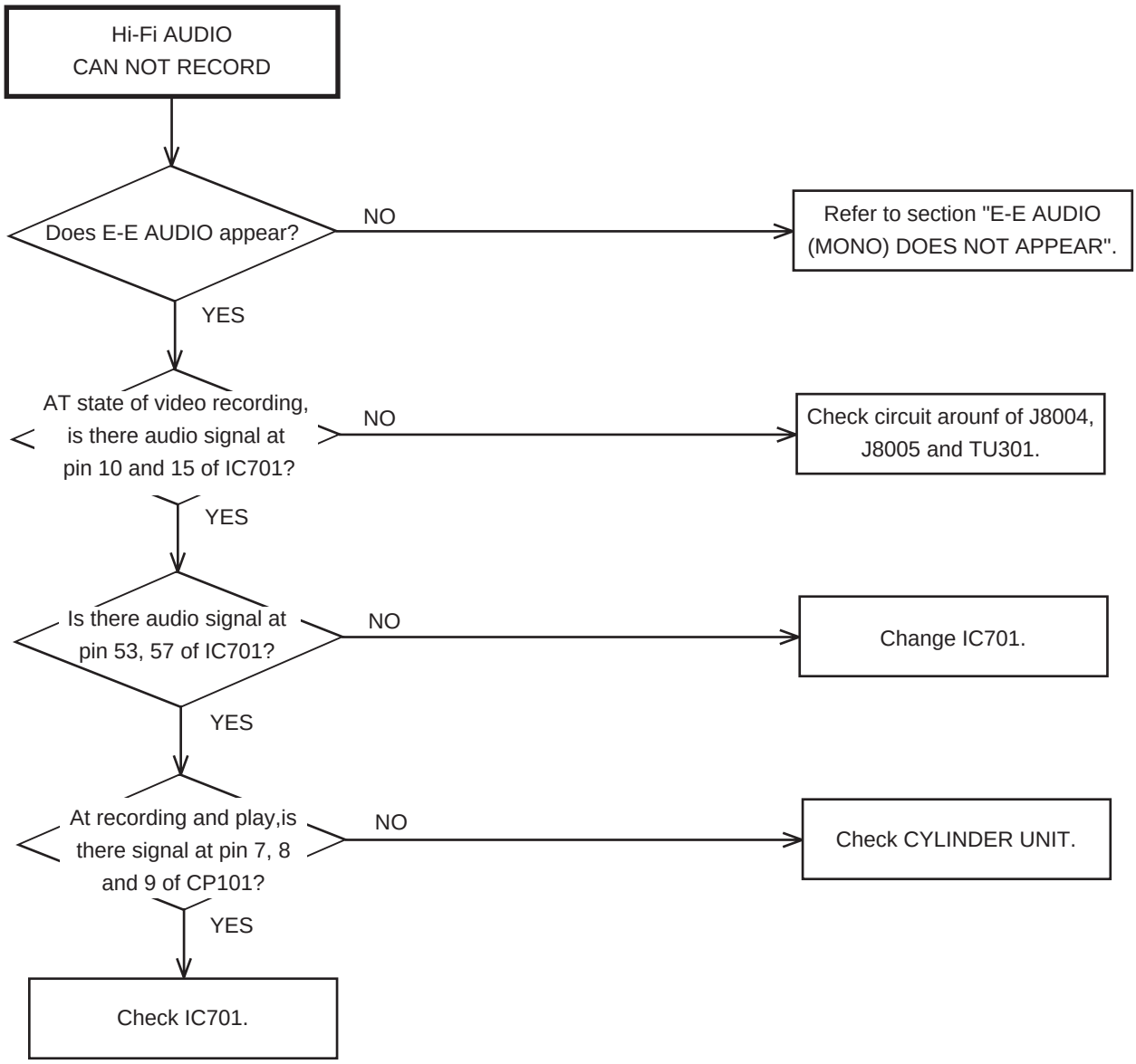

TROUBLESHOOTING GUIDE

(DVD SECTION)

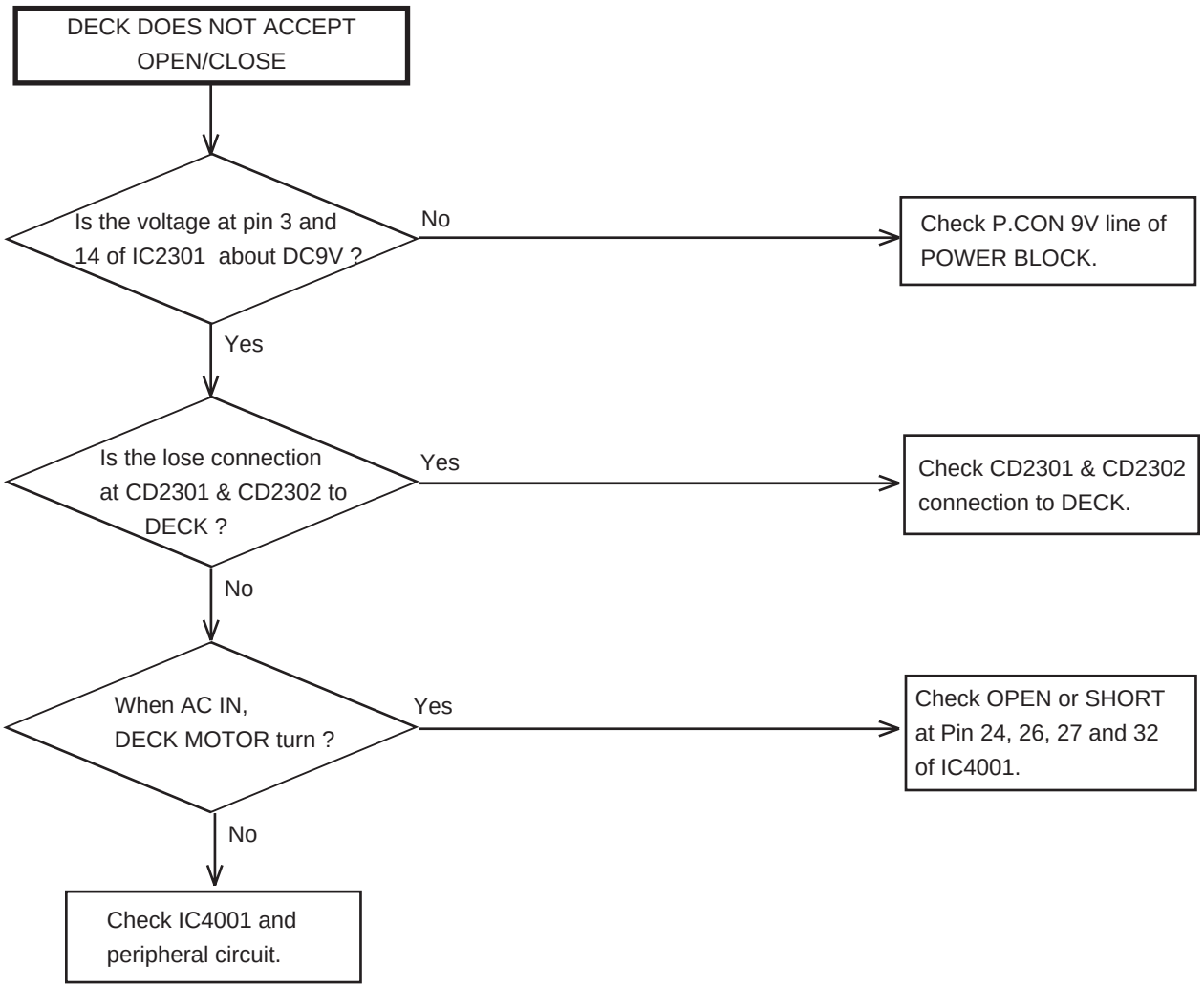

TROUBLESHOOTING GUIDE

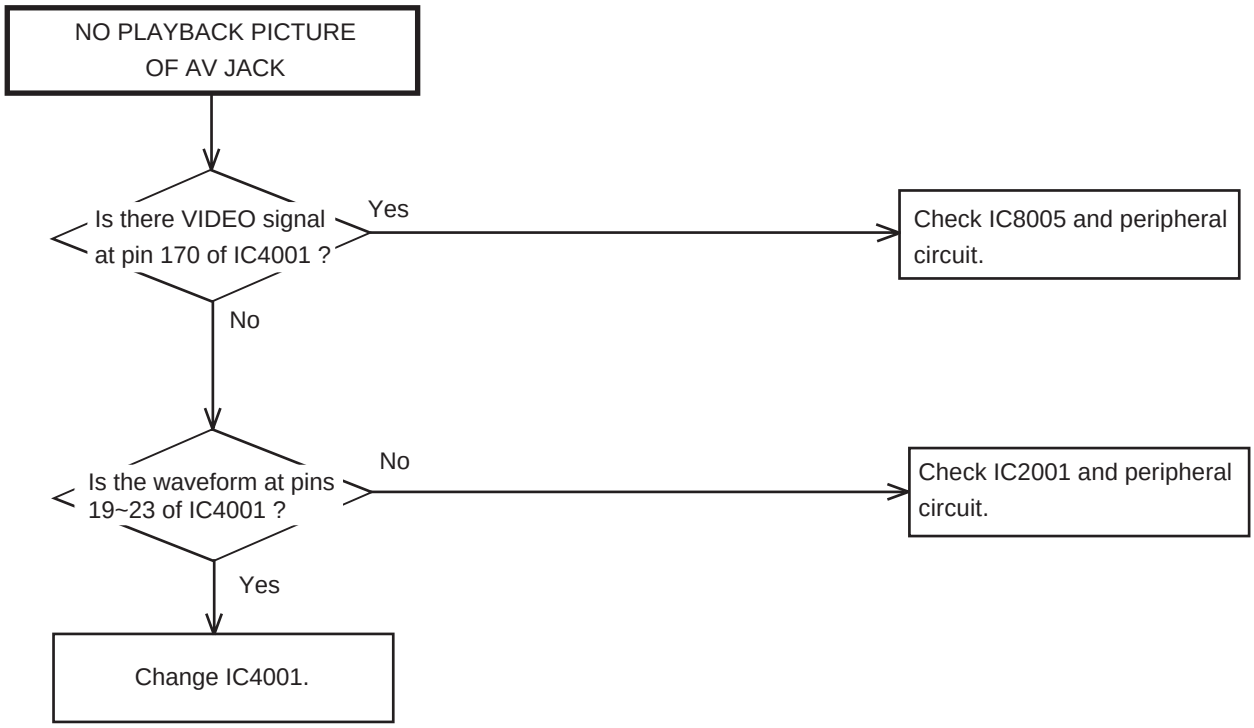

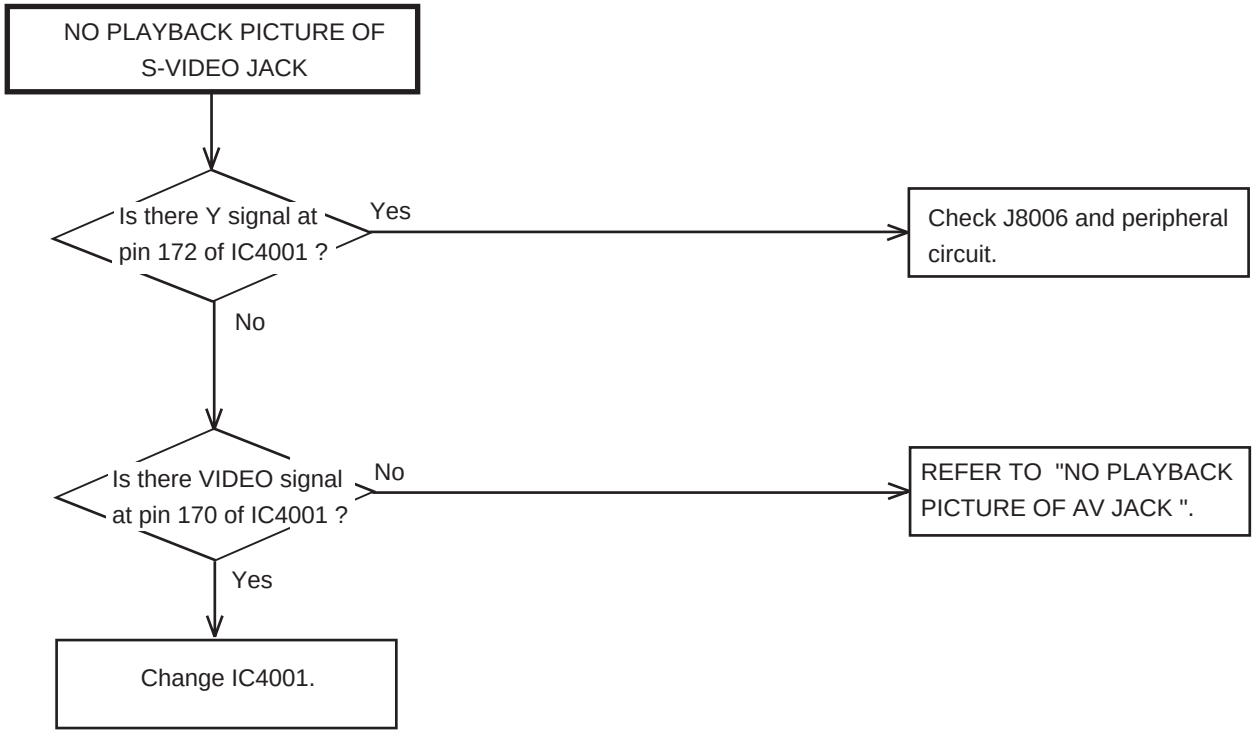

TROUBLESHOOTING GUIDE

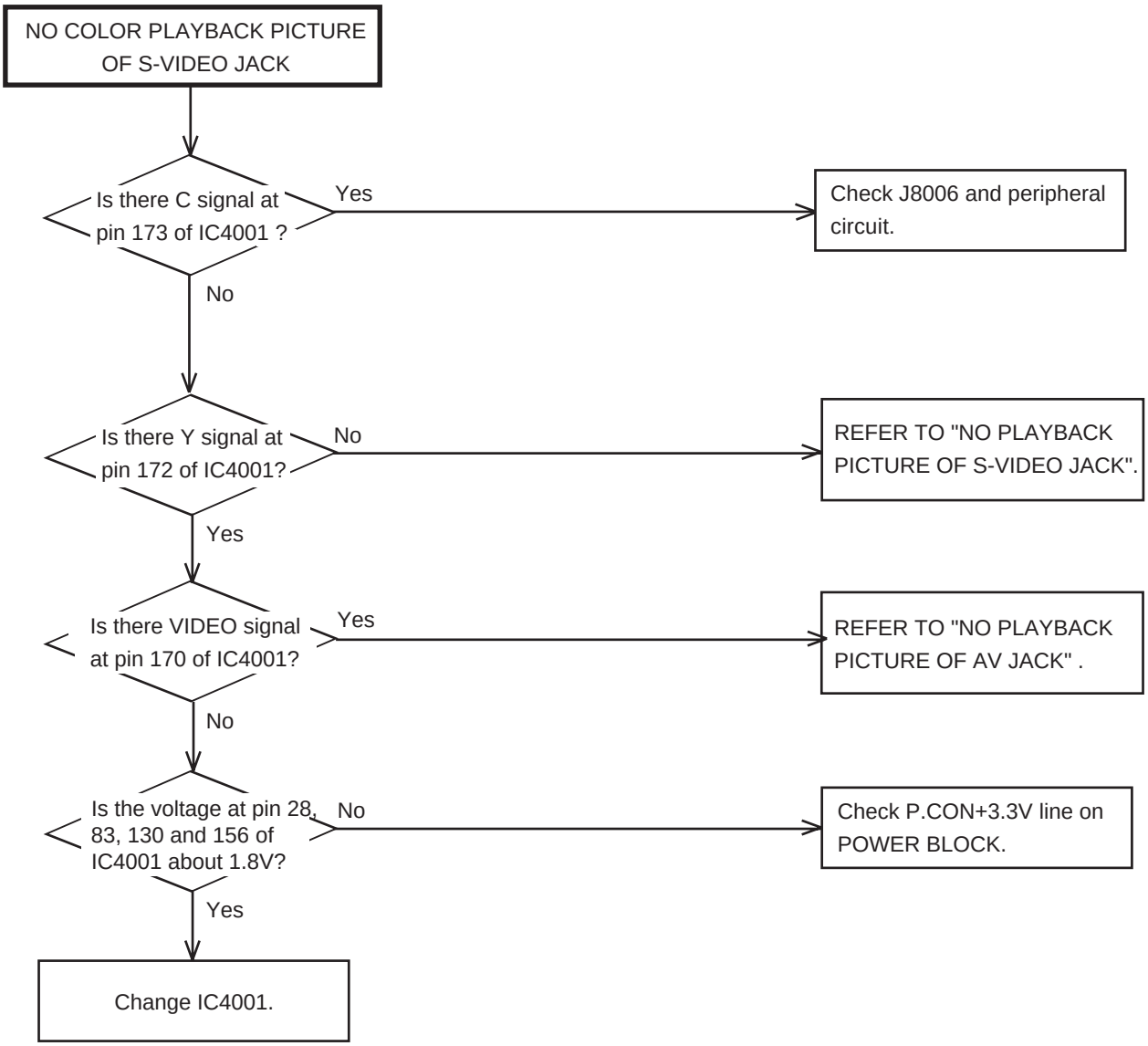

TROUBLESHOOTING GUIDE

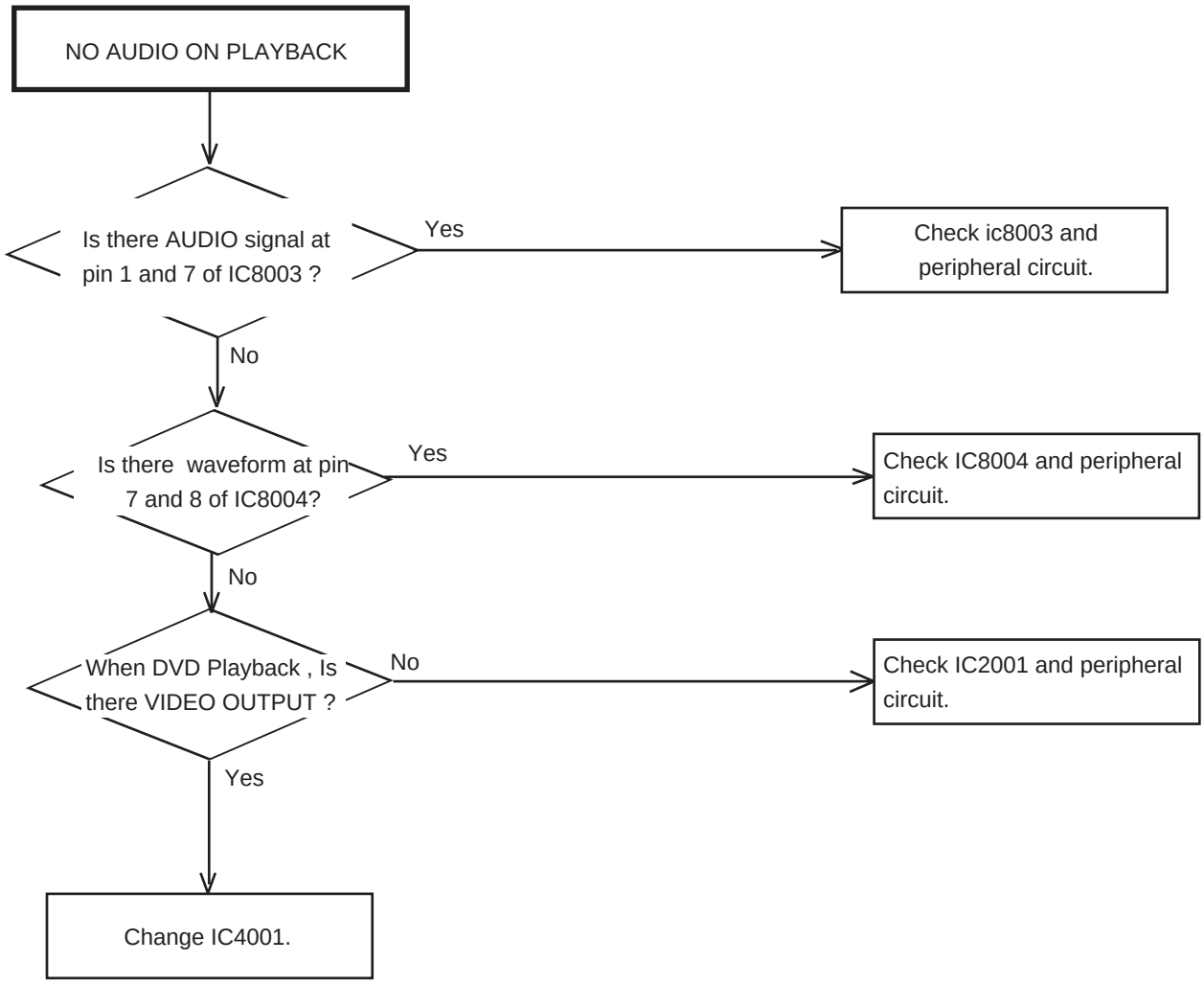

SEMICONDUCTOR BASE CONNECTIONS

DIODE

1SS133T-77
MTZJ13B T-77
MTZJ27B T-77
MTZJ3.0B T-77
MTZJ33B T-77
MTZJ5.1B T-77
MTZJ6.8B T-77
MTZJ9.1B T-77
SARS01-V1

10ELS6N-TA1B2

1N4005-EIC
21DQ09N-TA2B1
RGP15J-G23
RM11C-EIC

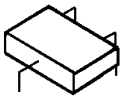

KDS120RTK
KDS121RTK

MCL4148

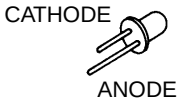

LTE-3271T-012A-O
LTL-1CHGT-002A

IC

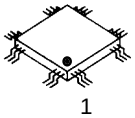

AN3663FBP
LA71206M-MPB
LA9703WL
LC78663NRW
OEC0132A
ZR36742

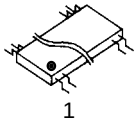

LA6560
M11L416256SA-35T
MSM56V16160F-8
PCM1742KE/2K
SN74LV4052APW

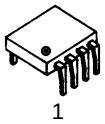

S-24C02BDP-1A
S-24C04BFJ-TB

BA10358F-E2
NJM2533V(TE2)
NJM4580M

PQ1X251M2ZP
PS2561L1-1-V(W)
PST3231NR

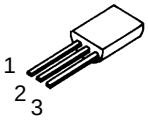

KIA431

TRANSISTOR

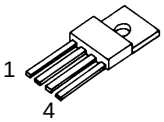

KIA78R09API

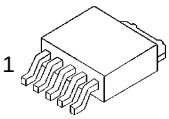

PQ070XZ01ZP

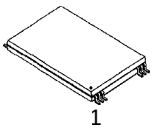

SST39VF800A-70-4

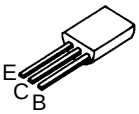

KTA1241_Y-AT
KTA1266-AT(Y,GR)
KTA1271_Y-AT

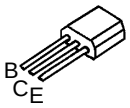

KTC3203_Y-AT
KTC3209_Y-AT

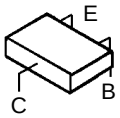

2SA1036KT146
2SA1037AKT146
KRA101SRTK
KRA103SRTK
KRC103SRTK
KRC104SRTK
KTA1504S_Y_RTK
KTC3875S_Y_RTK

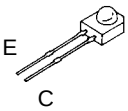

ST-304L

RPI-352C40N

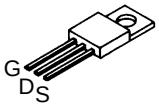

STP5NC50FP

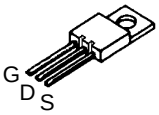

RPI-303

GENERAL SPECIFICATIONS [HR-XVC20US]

G-1	**Outline of the product**			DVD VIDEO PLAYER & VHS Player / Recorder
G-2	**DVD System**	Color System		NTSC
		Disc		DVD, CD-DA, CD-R/RW, VIDEO CD
		Disc Diameter	Disc Diameter	120 mm , 80 mm
		Deck	Disc Loading System	Front Disc Loading
			Motor	3 Motors
		Pick up		1-Lens 2-Beams System
		Playback time (Max)	DVD 1-Layer	135min (4.7GB)
			DVD 2-Layer	245min (8.5GB)
			CD	74min
			VIDEO CD	74min
		Search speed		Fwd 2-20 times / 4 step
			Actual	2-45 times (DVD, VIDEO CD)
				4-40 times (CD)
				Rev 2-20 times / 4 step
			Actual	2-45 times (DVD, VIDEO CD)
				4-40 times (CD)
		Slow speed		Fwd 1/7-1/2 times
			Actual	--
				Rev --
			Actual	--
G-3	**VCR System**	System		VHS Player / Recorder
		Video System		NTSC
		Hi-Fi STEREO		Yes
		NTSC PB(PAL60Hz)		No
		Deck	DECK	OVD-7
			Loading System	Front
			Motor	3
		Heads	Video Head	4Head
			FM Audio Head	2Head
			Audio /Control	Mono/Yes
			Erase(Full Track Erase)	Yes
		Tape Speed	Rec PAL	-
			Rec NTSC	SP/SLP(EP)
			Play PAL	-
			Play NTSC	SP/SLP(EP)
		Fast Forward / Rewind Time (Approx.) at 25oC		FF:1'48"/REW:1'48"
			with Cassette	T-120
		Forward/Reverse	NTSC or PAL-M	SP/SLP(EP) = 3x,5x / 9x,15x
		Picture Search	PAL or SECAM	-
		Frame Advance		Yes
		Slow Speed		1/10
G-4	**Tuning System**	Broadcasting System		US System M
		Tuner and Receive CH	System	1Tuner
			Destination	US (w/CATV)
			Tuning System	F-Synth
			Input Impedance	VHF/UHF 75 OHM
			CH Coverage	2~69,4A,A-5~A-1,A~I
				J~W,W+1-W+84
		Intermediate Frequency	Picture(FP)	45.75 MHz
			Sound(FS)	41.25 MHz
			FP-FS	4.50 MHz
		Preset CH		-
		RF Converter Output		Yes
			Channel	3 or 4 ch
			Level/Impedance	66 dBu / 75 Ohm
			Sound Selector	No
		Stereo/Dual TV Sound		US-ST
		Tuner Sound Muting		Yes
G-5	**Power**	Power Source	AC	120V 60Hz
			DC	-
		Power Consumption		16 W at 120V 60Hz
			Stand by	2 W at 120V 60Hz
			Per Year	-- W
		Protector	Power Fuse	Yes
G-6	**Regulation**		Safety	UL / CSA
			Radiation	FCC / IC
			Laser	DHHS
G-7	**Temperature**		Operation	5oC - 40oC
			Storage	-20oC - 60oC
G-8	**Operating Humidity**			Less than 80% RH

GENERAL SPECIFICATIONS [HR-XVC20US]

G-9	Signal	Video Signal		Output Level	1 V p-p/75 ohm (DVD,VCR)
				S/N Ratio (Weighted)	65 dB(DVD) 50 dB(VCR)
				Horizontal Resolution	500 Lines (DVD) 230 Lines(VCR Mode)
		RGB Signal		Output Level	-
		Audio Signal		Input Level Microphone	-
				Input Level Line	-8 dBm/ 50k ohm(VCR)
				Output Level Line	-8 dBm/ 1k ohm (VCR, 0dB=0.775Vrms) -12dB/ 1k ohm (DVD, -20dBFs 0dBFs=2.0Vrms)
				Digital Output Level	0.5 V p-p / 75 ohm(DVD)
				S/N Ratio at (Weighted)	90dB(DVD), 42dB(VCR at SP)
				Harmonic Distortion (1KHz) Typical	0.02% (DVD), 1.5% (VCR at SP)
				Frequency Response : DVD Mode at DVD	4 Hz - 22 KHz
				DVD Mode at VIDEO CD	4 Hz - 20 KHz
				DVD Mode at CD	4 Hz - 20 KHz
				VCR Mode at SP	100Hz - 10kHz
				VCR Mode at LP	-
				VCR Mode at SLP	100Hz - 4kHz
		Hi-Fi Audio Signal		Dynamic Range : More than	90dB
				Frequency Response	20Hz ~20kHz
				Wow And Flutter : Less than	0.01 %Wrms
				Channel Separation : More than	60 dB
				Harmonic Distortion : Less than	0.01
G-10	On Screen Display (DVD)	Menu			Yes
			Menu Type		Character
			Language		Yes
				Menu	Yes
				Sub Title	Yes
				Audio	Yes
			Picture		Yes
				TV Screen Size	Yes
				OSD Display On/Off	Yes
				Slide Show	Yes
				Interval Time	Yes
			Sound		Yes
				DRC (Dynamic Range Control)	Yes
				dts Decode	No
				Output (5.1ch/2ch)	No
				Surround On/Off	No
				Center On/Off	No
				Sub Woofer On/Off	No
			Parental		Yes
				Password Lock/Unlock	Yes
				Rating Level	Yes
			Other		Yes
				OSD Language (Set up Language)	Yes
				Output (RGB/Composite)	No
			Open		Yes
			Close		Yes
			No disc		Yes
			Reading		Yes
			Play		Yes
			Still/Pause		Yes
			Stop		Yes
			Prohibit Mark		Yes
			Step		Yes
			Next		Yes
			Back		Yes
			Random		Yes (CD, VIDEO CD, MP3)
			Repeat		Yes
			Slow+ ##		Yes
			Slow- ##		No
			Search+ ##		Yes
			Search- ##		Yes
			Jump		Yes
			Resume		Yes
			Title No.		Yes
			Chapter No.		Yes
			Track No.		Yes
			Time		Yes
			Sub Title No.		Yes
			Angle No.		Yes
			Vocal On/Off		Yes
			Audio No.		Yes
			Audio Stereo L/R		Yes (VIDEO CD)
			Zoom		Yes
			Marker No.		Yes
			Spatializer (N-2-2)		Yes
			Program Play Back		Yes (CD, VIDEO CD, MP3)
			MP3/WMA/JPEG	Folder Name	Yes
				File Name	Yes
				File No	Yes
				Time	Yes
				Track No	Yes

GENERAL SPECIFICATIONS [HR-XVC20US]

	On Screen Display(VCR)	Menu			Yes
			Menu Type		Character
			Timer Rec Set		Yes
			Auto Repeat On/Off		Yes
			SAP On/Off		Yes
			CH Set-Up		Yes
				TV/CATV	Yes
				Auto CH Memory	Yes
				Add/Delete	Yes
			System Set Up		Yes
				Clock Set	Yes (Calendar 12H)
				Language	Yes
				No Noise Back Ground	Yes
				Auto Clock	Yes
				Standard Time	Yes
				Daylight Saving Time	Yes
		G-CODE(or SHOWVIEW or PLUSCODE)No. Entry			No
		Stereo, Audio Output, SAP			Yes
		Play/Stop/FF/Rew/Rec/OTR/T-Rec /Pause/Eject/Tape In (Symbol Mark)			Yes
				CH/AV	Yes
				Clock	Yes
				Repeat	Yes
				Pin Code	No
				Tape Counter	Yes
				Index	Yes
				Hotel Lock	No
				Tape Speed	Yes
				ATR / Manual Tracking	Yes
				Hi-Fi	Yes
				Zero Return	Yes
G-11	**OSD Language**		DVD OSD		Eng Fre Spa
			VCR OSD		Eng Fre Spa
G-12	**Clock,Timer and Timer Back-up**	Calendar			1990/1/1 ~ 2081/12/31
		Timer Events			8 Program/ 1 Month
		One Touch Recording Max Time			6 Hours
		OTPB Valid Time			No
		Timer Back-up (at Power Off Mode)			5 sec
G-13	**Display**	DISPLAY			Yes
				DISPLAY type	LED Module (Green, "Rec" &Timer symbol = Red)
				Clock/Counter,CH,Timer Rec,OTR, Play Rec,FF(Cue),Rew(Rev),Stop,ATR ,Eject	No
				VCR	Yes
				DVD	Yes
				CD	Yes
				Clock	Yes (12h)
				AM	No
				PM	Yes
				Counter VCR	Yes (hour:min)
				DVD	Yes (hour:min)
				CD	Yes (min:sec)
				Eject	Yes
				Counter Remain	No
				Play	Yes
				Stop	No
				Rec	Yes
				FF / Cue	No
				REW /Review	No
				Pause/Still	Yes
				OTR	No
				T-Rec	Yes
				Chapter	No
				TITLE	No
				TRACK	Yes
				Repeat	No
				Hi-Fi	No
				SP	No
				LP	No
				SLP	No
				CH	Yes
				RF Output CH	Yes
				Tape In	Yes
				Remocon Custom Code	Yes

GENERAL SPECIFICATIONS [HR-XVC20US]

G-14	**Remote Control**	Unit		RC-GA
		Glow in Dark Remocon		No
		Format		JVC
		Custom Code		43,53,6F,7F
		Power Source	Voltage(D.C)	3V
			UM size x pcs	UM-3 x 2 pcs
		Total Keys		50 Keys
		Keys	Power	Yes
			DISPLAY/CALL	Yes
			0	Yes
			1	Yes
			2	Yes
			3	Yes
			4	Yes
			5	Yes
			6	Yes
			7	Yes
			8	Yes
			9	Yes
			UP/CH+	Yes
			DOWN/CH-	Yes
			LEFT/ SET- / TRACKING- / VOL-	Yes
			RIGHT/ SET+ / TRACKING+ / VOL+	Yes
			VCR	Yes
			DVD	Yes
			TV/VCR	Yes
			DVD MENU	Yes
			TITLE	Yes
			SET UP MENU/ VCR MENU	Yes
			SELECT/ENTER	Yes
			CLEAR/CANCEL	Yes
			RETURN	Yes
			PLAY	Yes
			STOP	Yes
			PAUSE/STILL/STEP	Yes
			FF(Cue)/SEARCH+	Yes
			REW(Review)/SEARCH-	Yes
			REC/OTR	Yes
			SKIP+ / INDEX+	Yes
			SKIP- / INDEX-	Yes
			AUDIO / AUDIO SELECT	Yes
			ANGLE/COUNTER RESET	Yes
			SUB TITLE/ATR	Yes
			PLAY MODE/SPEED	Yes
			T-REC	Yes
			CLOCK / COUNTER	Yes
			JUMP / ZERO RETURN	Yes
			ZOOM	Yes
			REPEAT A-B	Yes
			SLOW (Forward)	Yes
			MARKER	Yes
			OPEN/CLOSE	Yes
			CM SKIP	Yes
			TV POWER	Yes
			TV INPUT	Yes
			TV VOL+	Yes
			TV VOL-	Yes
		Slide SW	TV / VCR&DVD Select	Yes

GENERAL SPECIFICATIONS [HR-XVC20US]

G-15	Features (DVD)	Auto Power Off		No
		Parental Lock		Yes
		Echo		No
		Mic Mixing		No
		Video CD Playback		Yes
		MP3 Playback		Yes
		WMA Playback		Yes
		JPEG Playback		Yes
		Digital Out	Dolby Digital	Yes
			MPEG	Yes
			PCM	Yes
			DTS	Yes
		Down Mix Out	(Dolby Digital)	Yes
			(DTS)	No
		Spatializer (N-2-2)		Yes
		Screen Saver		No
		Auto Stop		No
	Features (VCR)	Auto Head Cleaning		No
		Auto Tracking		Yes
		HQ (VHS Standard High Quality)		Yes
		Auto Power On, Auto Play, Auto Rewind, Auto Eject		Yes
		Auto Power Off		No
		Forward/Reverse Picture Search		Yes
		VIDEO PLUS+ (SHOWVIEW, G-CODE)		No
		One Touch Playback		No
		Auto CH Memory		Yes
		AREA CODE		No
		Auto Clock Set		Yes
		Index Search		Yes
		SQPB (Option)		Yes
		CATV		Yes
		Energy Star		No
		MTS (SAP)		Yes
		CM Skip (30sec x 6 Times)		Yes
		Copy Disc to Tape		Yes (by Conditioning)
G-16	Accessories	Owner's Manual	Language	English
			w/Guarantee Card	Yes
		Remote Control Unit		Yes
		Guarantee Card		No
		Product Registration Card		Yes
		Warning Sheet		No
		Service Station List		No
		Important Tag		No
		AC Plug Adapter		No
		Quick Set-up Sheet		No
		Battery		Yes
			UM size x pcs	UM-3 x 2 pcs
		AC Cord		No
		AV Cord (1.2m)		Yes
		75 Ohm Coaxial Cable (0.9m)		Yes
		S-Video Cable		No
		21pin cable		No
		800 No Sticker		No
		Toll Free Insert Sheet		No
		Safety Tip		No

GENERAL SPECIFICATIONS [HR-XVC20US]

G-17	**Interface**	Switch	Front	Power	Yes
				Play	Yes
				Eject (VCR)	Yes
				Stop	Yes
				Rec/OTR	Yes
				Open/Close (DVD)	Yes
				CH +	Yes
				CH -	Yes
				FF/ Search(>>)	Yes
				Rew/Search(<<)	Yes
				Still/Pause	No
				Shuttle (Search/REV/FWD)	No
				DVD/VCR	Yes
				Main Power SW	No
			Rear	Attenuator	No
				S-Video/Component Video Selector	Yes
				RF Out (Slide SW)	No
				Main Power SW	No
				CS Easy	No
		Volume		Phones Volume	No
				Mic Volume	No
				Echo Volume	No
				Rec/OTR	No
		Terminals	Front	Video In	RCA x 1 (Black)
				Audio In	RCA x 2(Stereo, Black)
			Rear	Video Output	RCA x1 (Yellow) S-Video x 1(DVD Signal Only) Component x1 (RCA 3pin, DVD Signal Only)
				Audio Output	RCA x 4(Stereo, Red/White) Coaxial x 1 (Digital Audio, DVD Signal Only)
				Optical Out (Option)	Yes (Digital Audio, DVD Signal Only)
				Video Input (Option)	No
				Audio Input (Option)	No
				RF Input / Output	Yes
				Euro Scart	No
				AC Inlet	No
		Indicator	LED	Power	No
				Rec	No
				T-Rec	No
				TV/VCR	No
				DVD	Yes (GREEN)
				VCR	Yes (GREEN)
				Surround	No
				Level Meter	No
G-18	**Set Size**			Approx. W x D x H (mm)	430 x 249 x 99
G-19	**Weight**			Net (Approx.)	3.6kg (7.9lbs)
				Gross (Approx.)	4.7kg (10.4lbs)
G-20	**Carton**		Master Carton		No
				Content	--- Sets
				Material	--- / ---
				Dimensions W x D x H(mm)	---
				Description of Origin	---
			Gift Box		Yes
				Material	Single Full Color Carton
				W/Color Photo Label	No
				Dimensions W x D x H(mm)	497 x 360 x 180
				Design	As Per BUYER 's
				Description of Origin	Yes
			Drop Test	Natural Dropping At	1 Corner / 3 Edges / 6 Surfaces
				Height (cm)	80 cm
			Container Stuffing		1,985 Sets/40' container
G-21	**Cabinet Material**		Cabinet	Front	PS 94V2 or More / DECABROM
			PCB	Non-Halogen Demand	No
				Eyelet Demand	No

JVC SERVICE & ENGINEERING COMPANY OF AMERICA
DIVISION OF JVC AMERICAS CORP.

www.jvcservice.com(US Only)

JVC CANADA INC.

Head office : 21 Finchdene Square Scarborough, Ontario M1X 1A7 (416)293-1311

JVC®

Printed in Japan
0212 VP

JVC

SCHEMATIC DIAGRAMS

DVD/CD PLAYER Hi-Fi STEREO VIDEO CASSETTE RECORDER

HR-XVC20US, HR-XVC21UC

CD-ROM No.SML200301

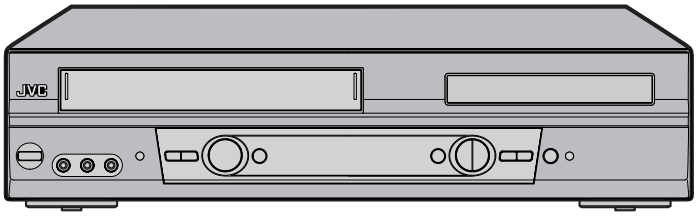

VHS SQPB
4 HEAD Hi-Fi
19µm HEAD
DVD VIDEO
COMPACT disc DIGITAL VIDEO
COMPACT disc DIGITAL AUDIO
WMA MP3 JPEG
dts DIGITAL OUT
DOLBY DIGITAL
SPATIALIZER® N-2-2™

SPECIFICATIONS *(The specifications shown pertain specifically to the model HR-XVC20US.)*

GENERAL

Power supply:	AC 120V 60Hz
Power consumption:	Operation: 16W
	Stand by: 2W
Weight:	7.9lbs (3.6 kg)
Dimensions:	Width : 16-15/16 inches (430 mm)
	Height : 3-7/8 inches (99 mm)
	Depth : 9-13/16 inches (249 mm)
Inputs/Outputs:	
Video:	In: 1Vp-p/75 ohm
	Out: 1Vp-p/75 ohm
Audio:	In: −8 dBm/50K ohm
	Out: −8 dBm/1K ohm
Antenna:	UHF/VHF IN/OUT: 75 ohm coaxial
Hi-Fi Frequency Response:	20Hz to 20,000Hz
Hi-Fi Dynamic Range:	More than 90dB

VCR section

Video Head:	4 Rotary Heads
Audio Track:	Hi-Fi Sound - 2 Tracks / MONO Sound - 1 Track
Tuner:	181 Channel Freq. Synthesized
	VHF 2-13
	UHF 14-69
	CATV 14-36 (A)-(W)
	37-59 (AA)-(WW)
	60-85 (AAA)-(ZZZ)
	86-94 (86)-(94)
	95-99 (A-5)-(A-1)
	100-125 (100)-(125)
	01 (5A)
RF Channel Output:	Channel 3 or 4, Switchable
F.FWD/REW Time:	Approx. 1 minute 48 seconds (with T-120 Cassette Tape) (at+25°C)

DVD section

Signal system:	NTSC
Applicable disc:	DVD (12cm, 8cm), CD (12cm, 8cm)
Audio characteristics:	DVD: 4Hz - 22KHz
Frequency response:	CD: 4Hz - 20KHz
S/N Ratio:	90dB
Harmonic distortion:	0.02%
Wow and flutter:	Below Measurable Level
Dynamic range:	90dB
Output:	Video : (RCA) 1 Vp-p/75ohm
	Audio : (RCA) −8 dBm/1Kohm
	Digital Audio : 0.5Vp-p 75 ohm
Pickup:	CD : Wavelength: 775 - 805 nm
	Maximum output power: 0.5 mW
	DVD : Wavelength: 640 - 660 nm
	Maximum output power: 1.0 mW

ACCESSORIES:

Remote control x 1
Batteries (2 x AA)
75 ohm Coaxial Cable x 1
AUDIO/VIDEO Cable x 1

HR-XVC20US, HR-XVC21UC D2VP11

This schematic diagrams is printed on 100% recycled paper.

COPYRIGHT © 2002 VICTOR COMPANY OF JAPAN, LTD

No.82948SCH
2002/12

INTERCONNEC

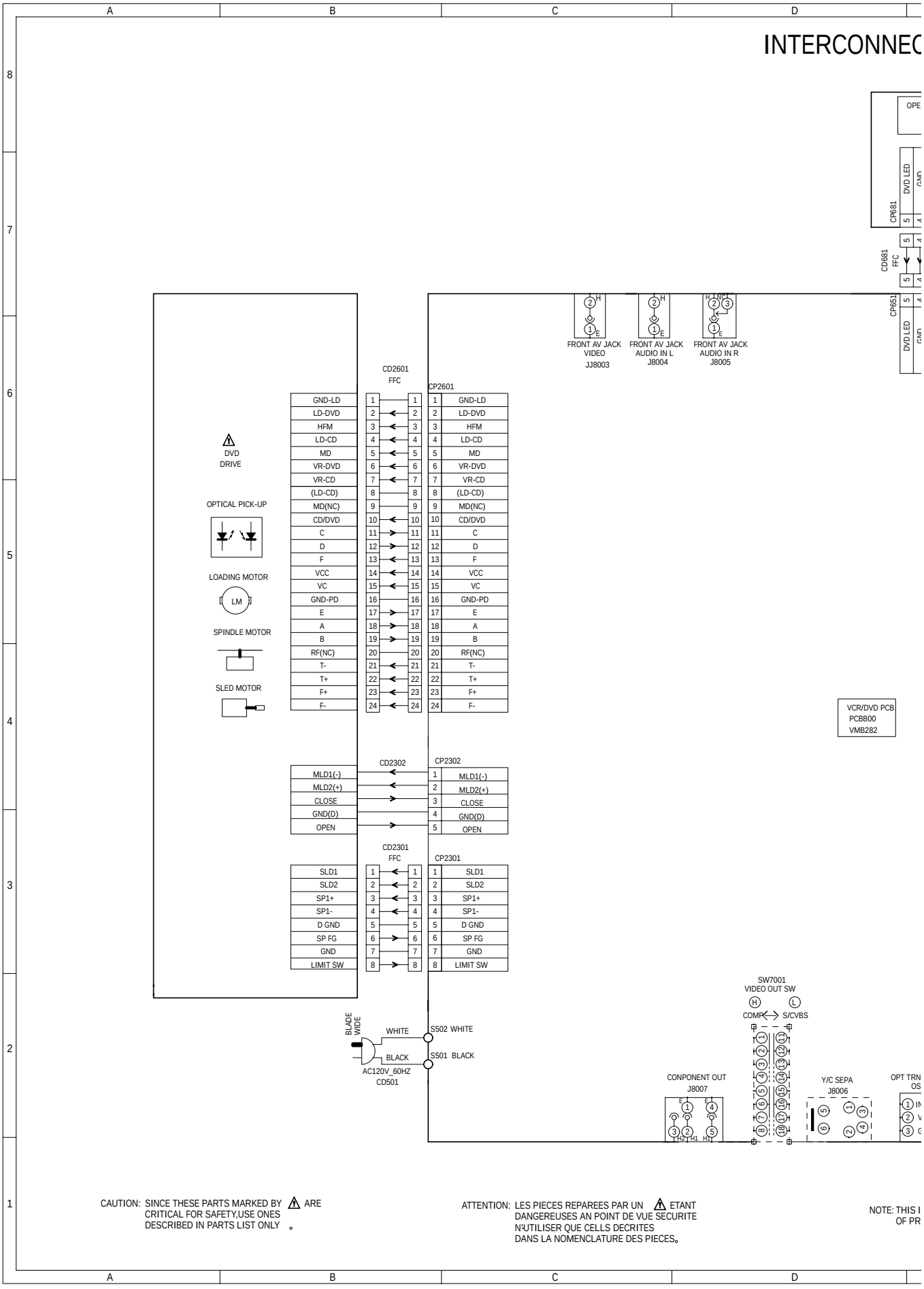

CAUTION: SINCE THESE PARTS MARKED BY ⚠ ARE CRITICAL FOR SAFETY,USE ONES DESCRIBED IN PARTS LIST ONLY 。

ATTENTION: LES PIECES REPAREES PAR UN ⚠ ETANT DANGEREUSES AN POINT DE VUE SECURITE N'UTILISER QUE CELLS DECRITES DANS LA NOMENCLATURE DES PIECES。

NOTE: THIS I
OF PR

ECTION DIAGRAM

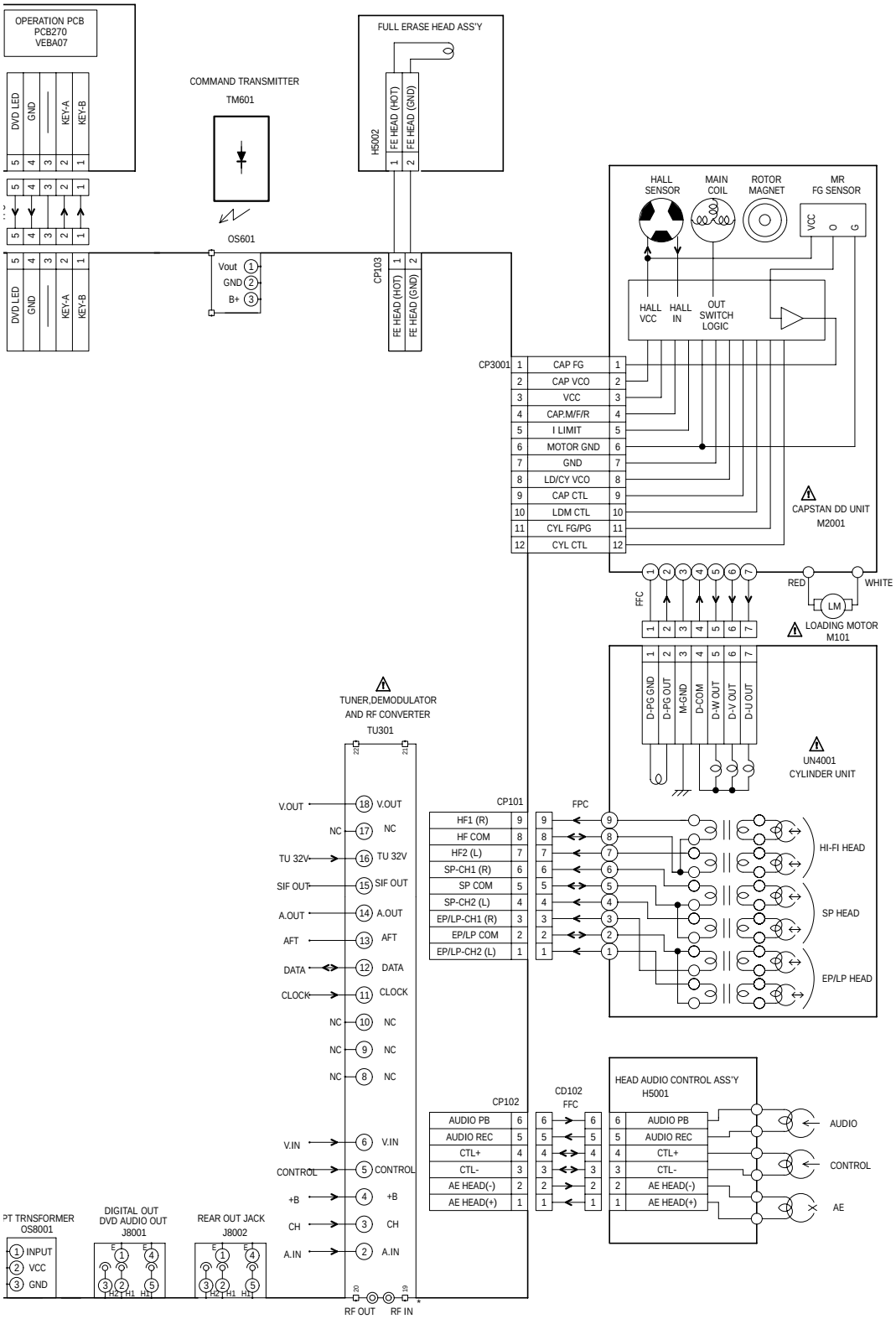

THIS INTERCONNECTION DIAGRAM IS THE LATEST AT THE TIME
OF PRINTING AND SUBJECT TO CHANGE WITHOUT NOTICE 。

Y/C/AUDIO/CCD/HEAD AMP
(VCR/DVD F

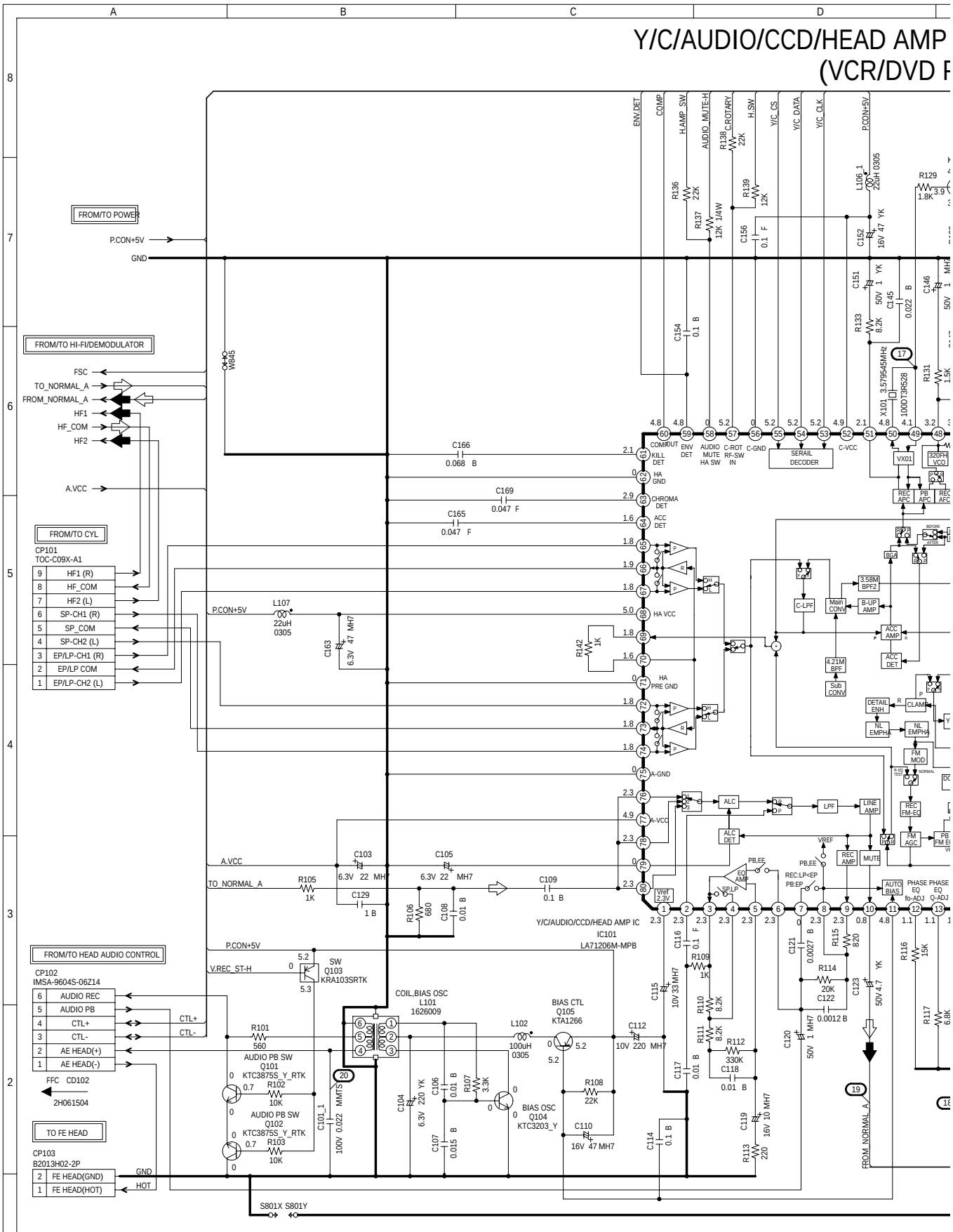

NOTE: THIS SCHEMATIC DIAGRAM IS THE LATEST AT THE TIME OF PRINTING AND SUBJECT TO CHANGE WITHOUT NOTICE。

NOTE: THE DC VOLTAGE EACH PART WAS MEASURED WITH THE DIGITAL TESTER DURING PLAYBACK.

Note : *The Parts Number, value and rated voltage etc. in the Schematic Diagram are for references only. When replacing the parts, refer to the Parts List.*

IP SCHEMATIC DIAGRAM
D PCB)

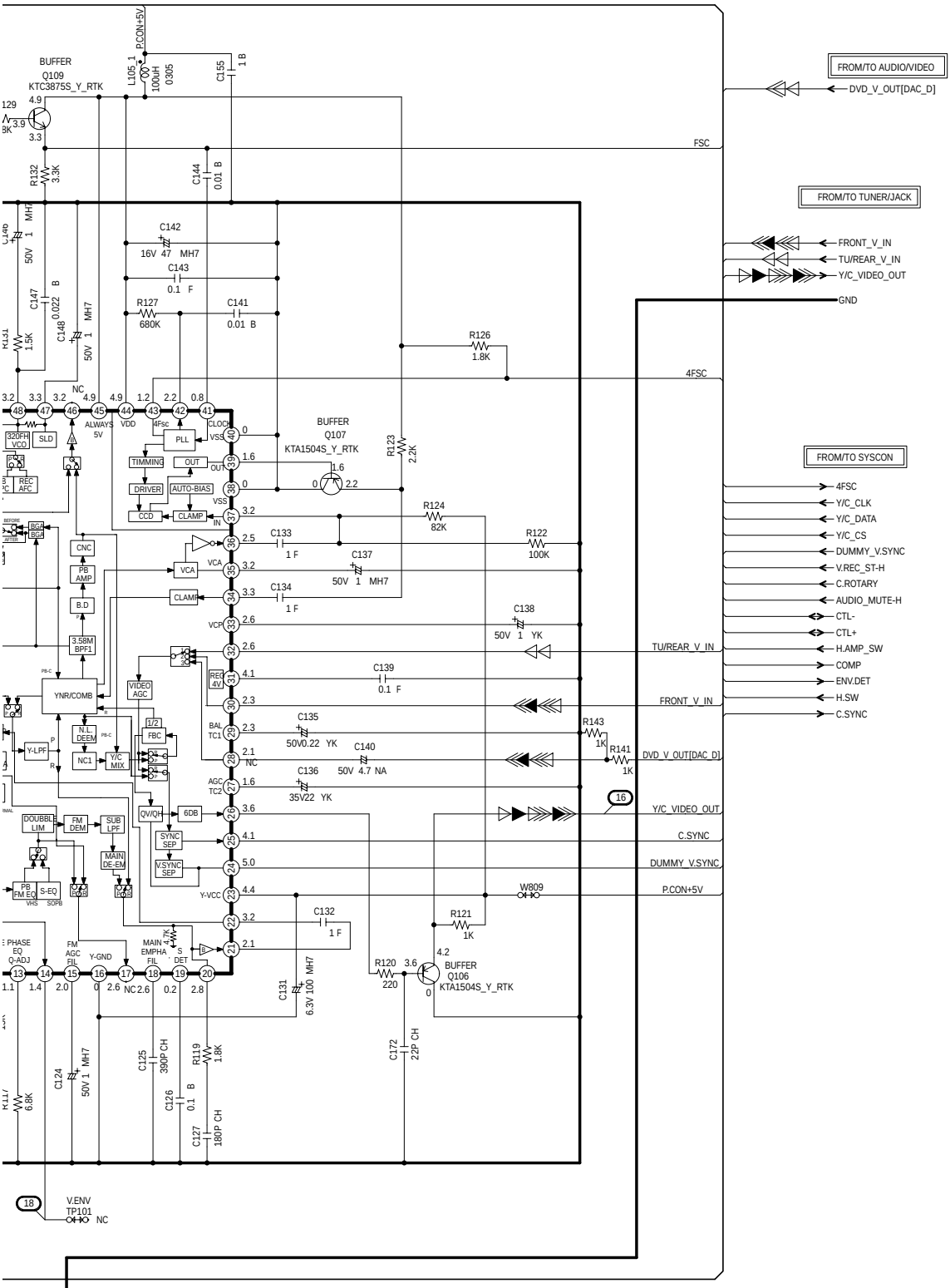

VCR SYSCON SCHEMATIC DIAG

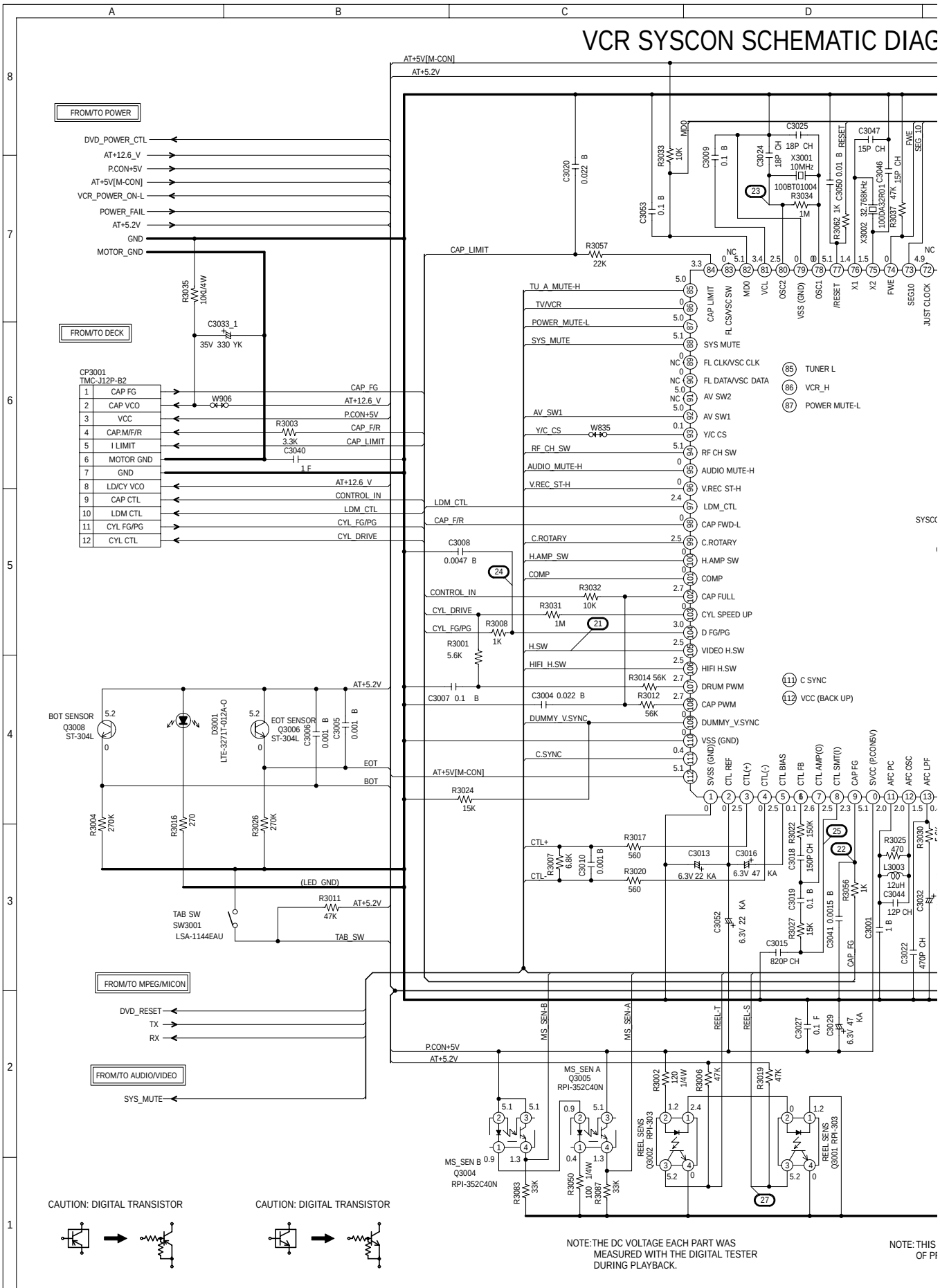

Note : The Parts Number, value and rated voltage etc. in the Schematic Diagram are for references only. When replacing the parts, refer to the Parts List.

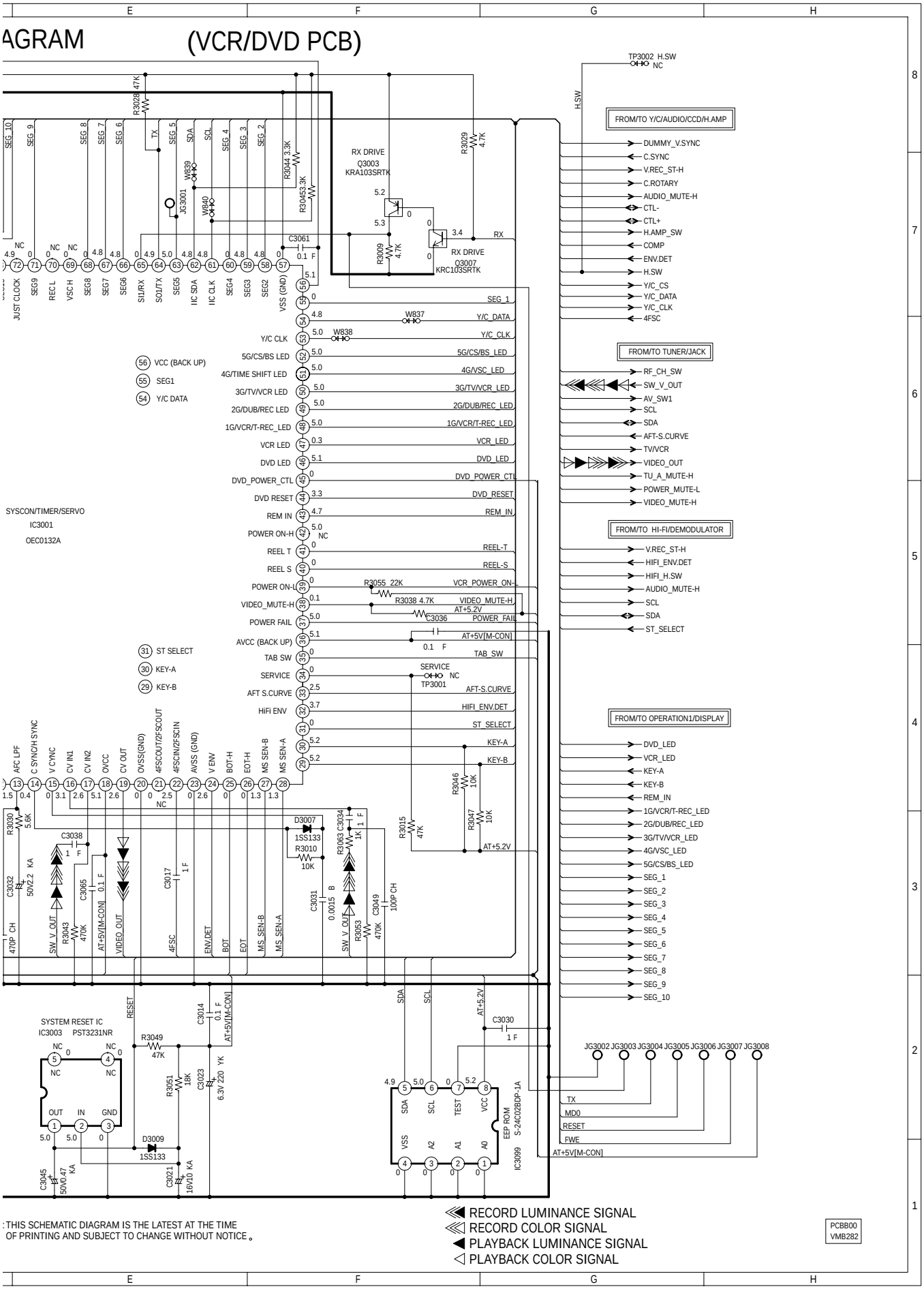

TUNER/JACK SCHEMATIC DIAG

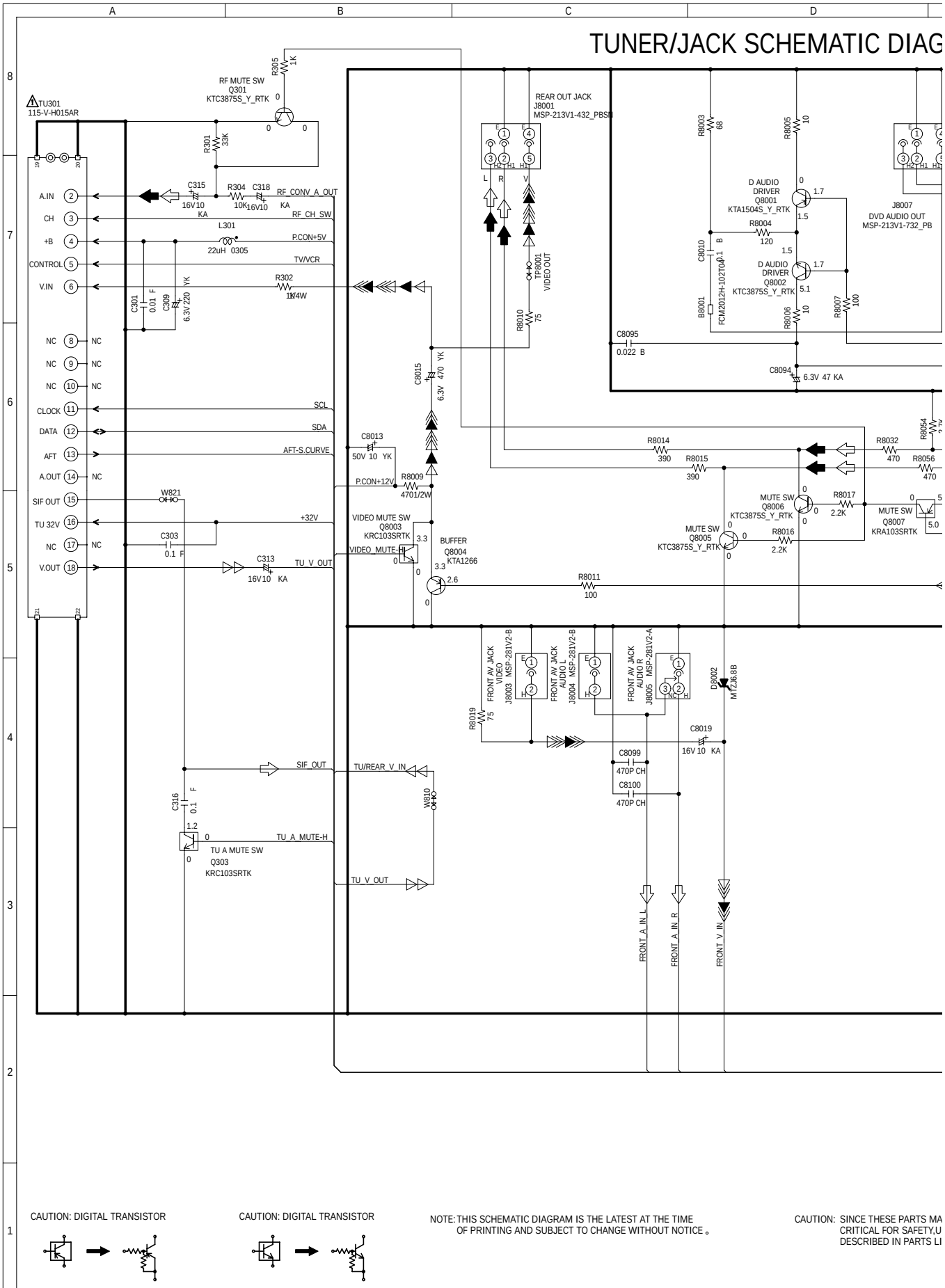

CAUTION: DIGITAL TRANSISTOR

CAUTION: DIGITAL TRANSISTOR

NOTE: THIS SCHEMATIC DIAGRAM IS THE LATEST AT THE TIME OF PRINTING AND SUBJECT TO CHANGE WITHOUT NOTICE 。

CAUTION: SINCE THESE PARTS MA
CRITICAL FOR SAFETY,U
DESCRIBED IN PARTS LI

Note : The Parts Number, value and rated voltage etc. in the Schematic Diagram are for references only. When replacing the parts, refer to the Parts List.

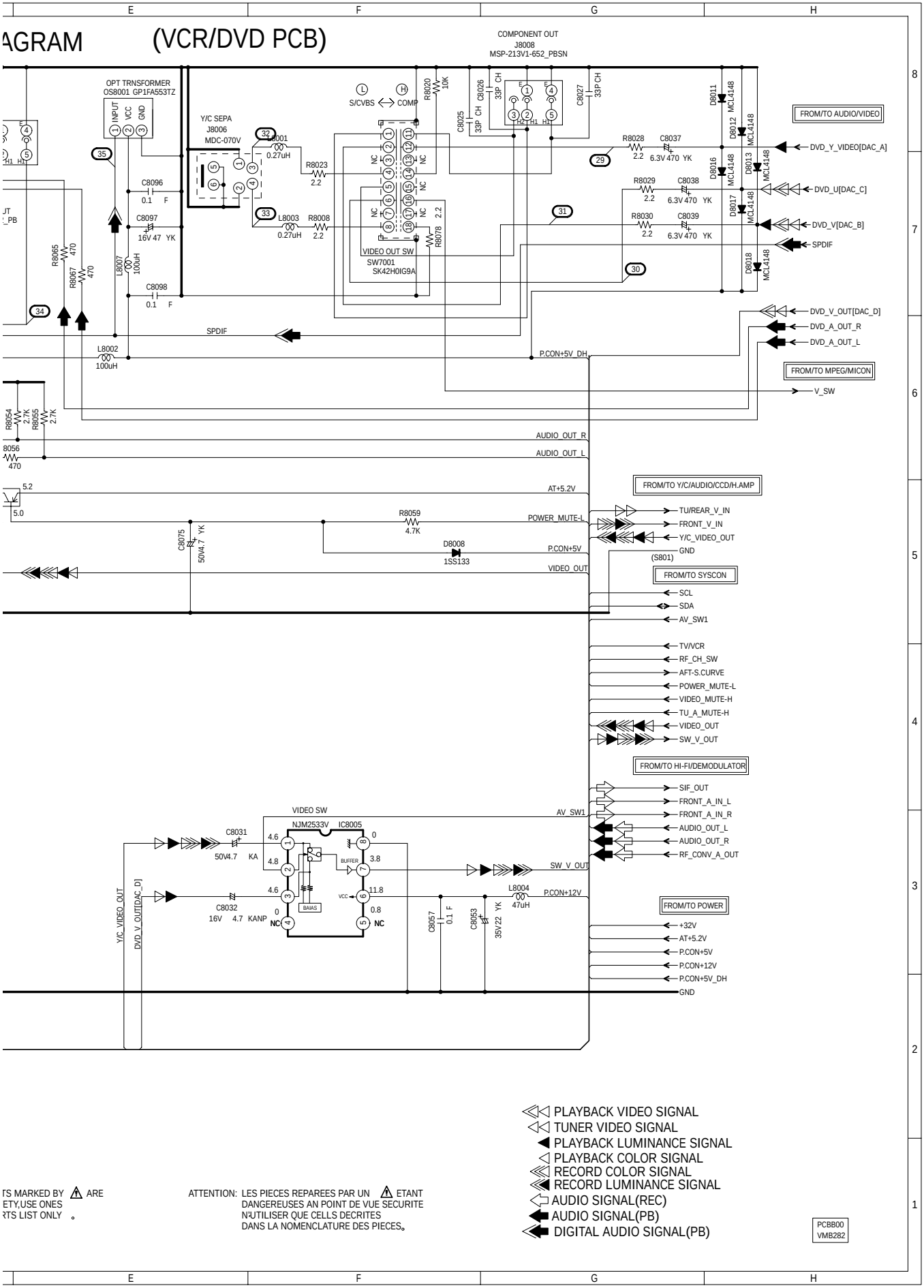

OPERATION/DISPLAY S
(VCR/DVI

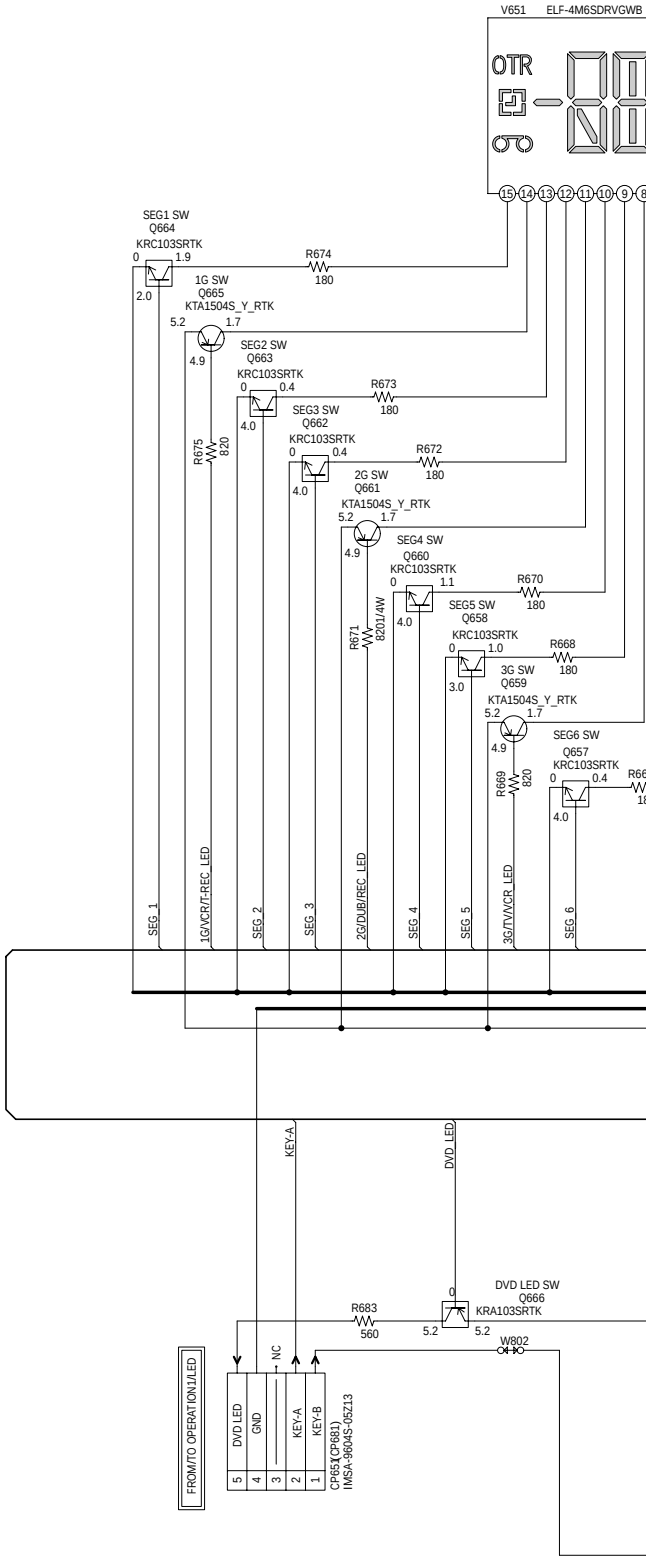

CAUTION: DIGITAL TRANSISTOR

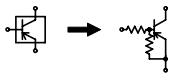

CAUTION: DIGITAL TRANSISTOR

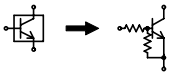

NOTE:THE DC VOLTAGE EACH P
MEASURED WITH THE D
DURING PLAYBACK.

Note : *The Parts Number, value and rated voltage etc. in the Schematic Diagram are for references only. When replacing the parts, refer to the Parts List.*

' SCHEMATIC DIAGRAM
)VD PCB)

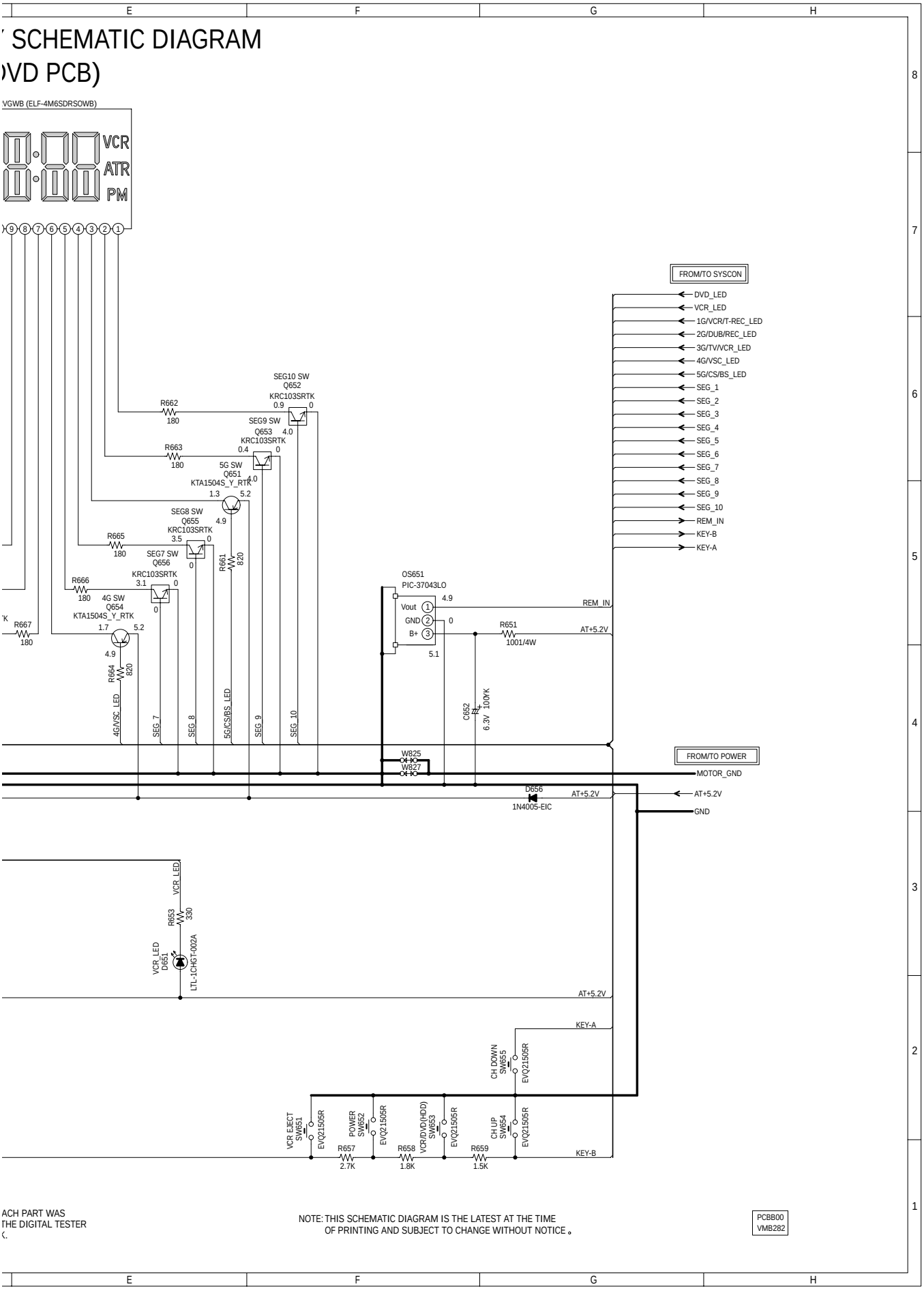

HI-FI/DEMODULATOR SCHEMATIC DIA

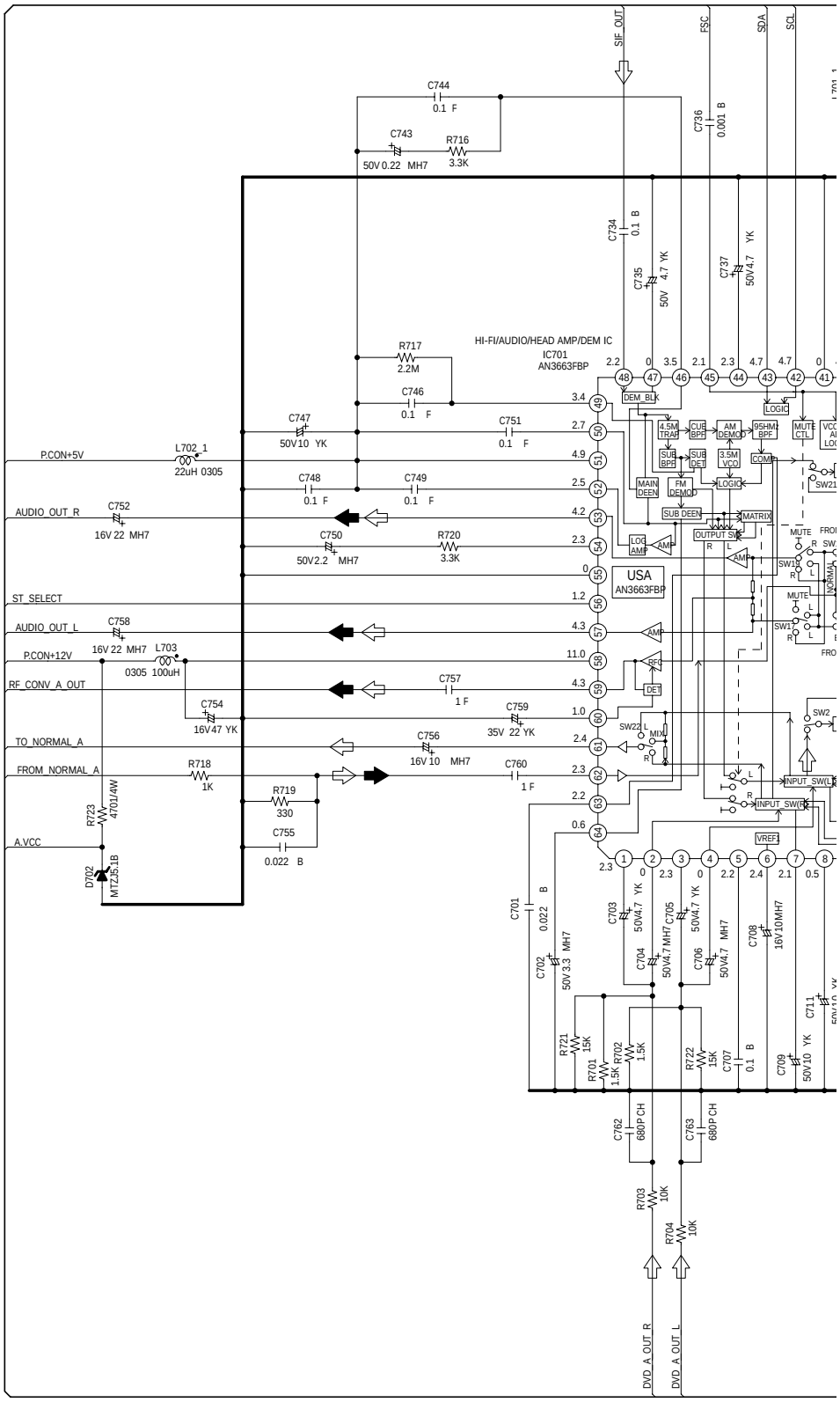

NOTE:THE DC VOLTAGE EACH PART WAS MEASURED WITH THE DIGITAL TESTER DURING PLAYBACK.

NOTE: THIS SCHEMATIC DIAG OF PRINTING AND SUB

Note : *The Parts Number, value and rated voltage etc. in the Schematic Diagram are for references only. When replacing the parts, refer to the Parts List.*

IAGRAM (VCR/DVD PCB)

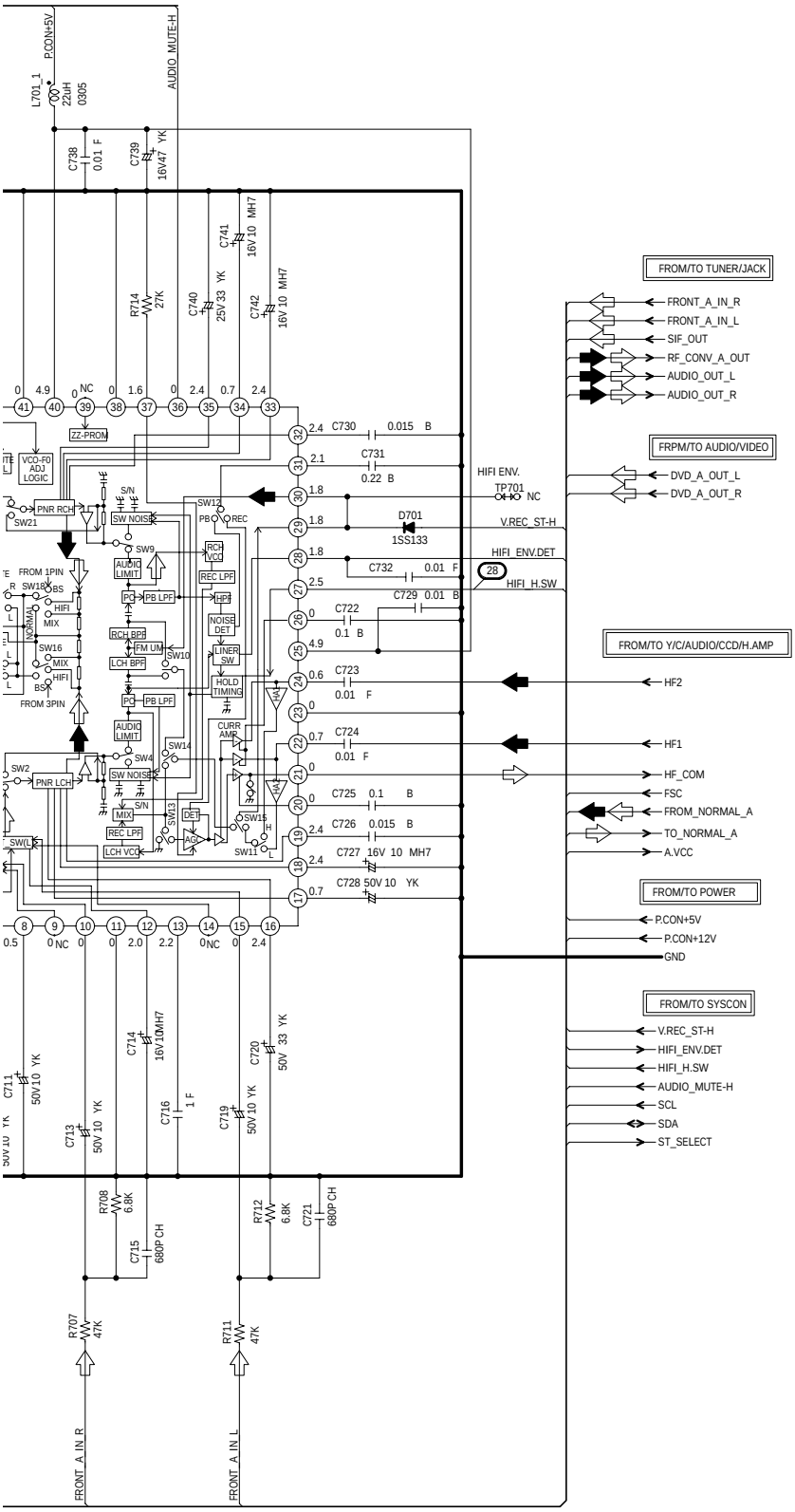

; DIAGRAM IS THE LATEST AT THE TIME
D SUBJECT TO CHANGE WITHOUT NOTICE 。

AUDIO SIGNAL(REC)
AUDIO SIGNAL(PB)

PCBB00
VMB282

POWER SCHEM

(VCR/DVD

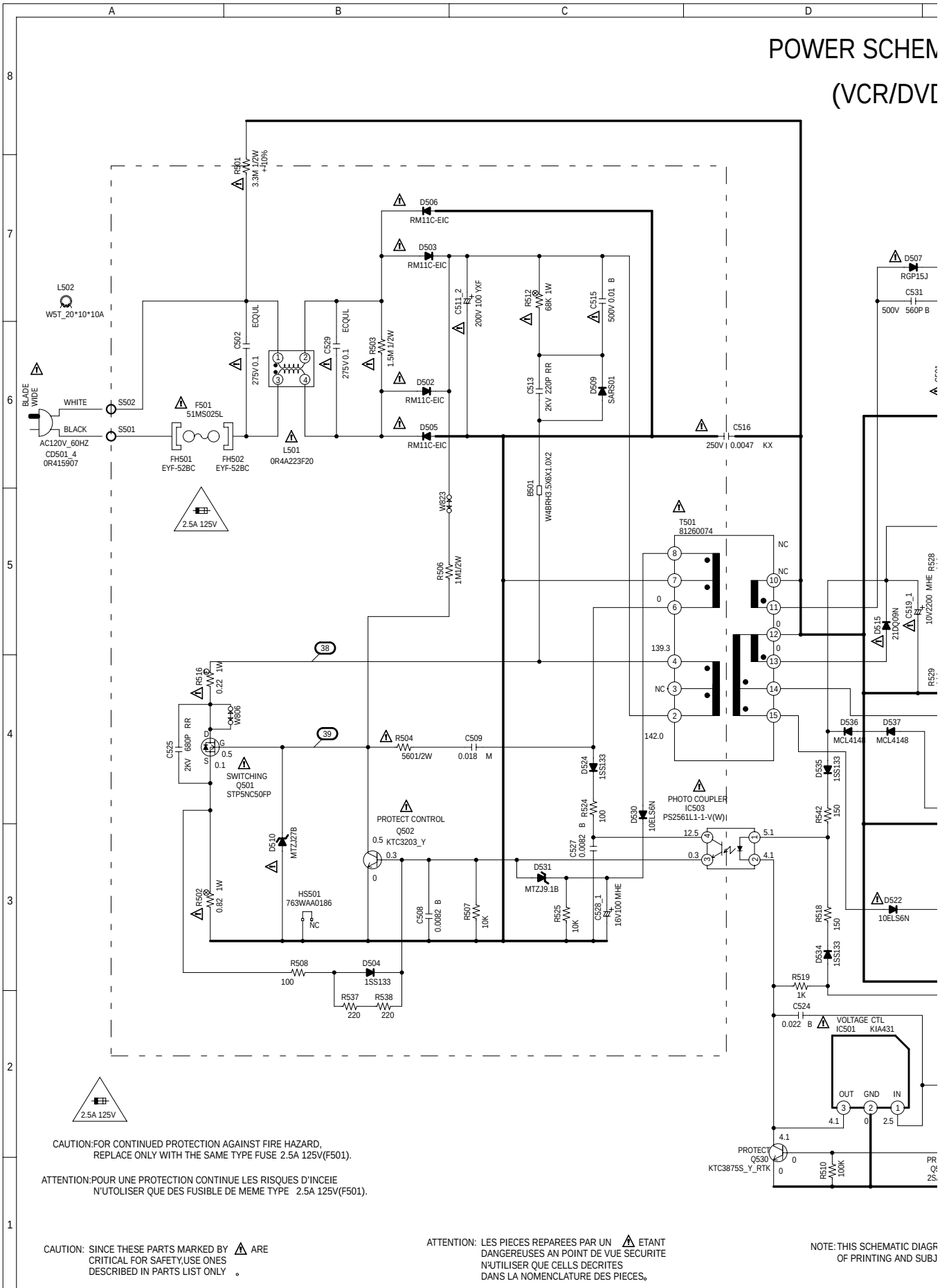

CAUTION:FOR CONTINUED PROTECTION AGAINST FIRE HAZARD,
REPLACE ONLY WITH THE SAME TYPE FUSE 2.5A 125V(F501).

ATTENTION:POUR UNE PROTECTION CONTINUE LES RISQUES D'INCEIE
N'UTOLISER QUE DES FUSIBLE DE MEME TYPE 2.5A 125V(F501).

CAUTION: SINCE THESE PARTS MARKED BY ⚠ ARE
CRITICAL FOR SAFETY,USE ONES
DESCRIBED IN PARTS LIST ONLY 。

ATTENTION: LES PIECES REPAREES PAR UN ⚠ ETANT
DANGEREUSES AN POINT DE VUE SECURITE
N'UTILISER QUE CELLS DECRITES
DANS LA NOMENCLATURE DES PIECES。

NOTE: THIS SCHEMATIC DIAGR
OF PRINTING AND SUBJ

Note : The Parts Number, value and rated voltage etc. in the Schematic Diagram are for references only. When replacing the parts, refer to the Parts List.

EMATIC DIAGRAM

VD PCB)

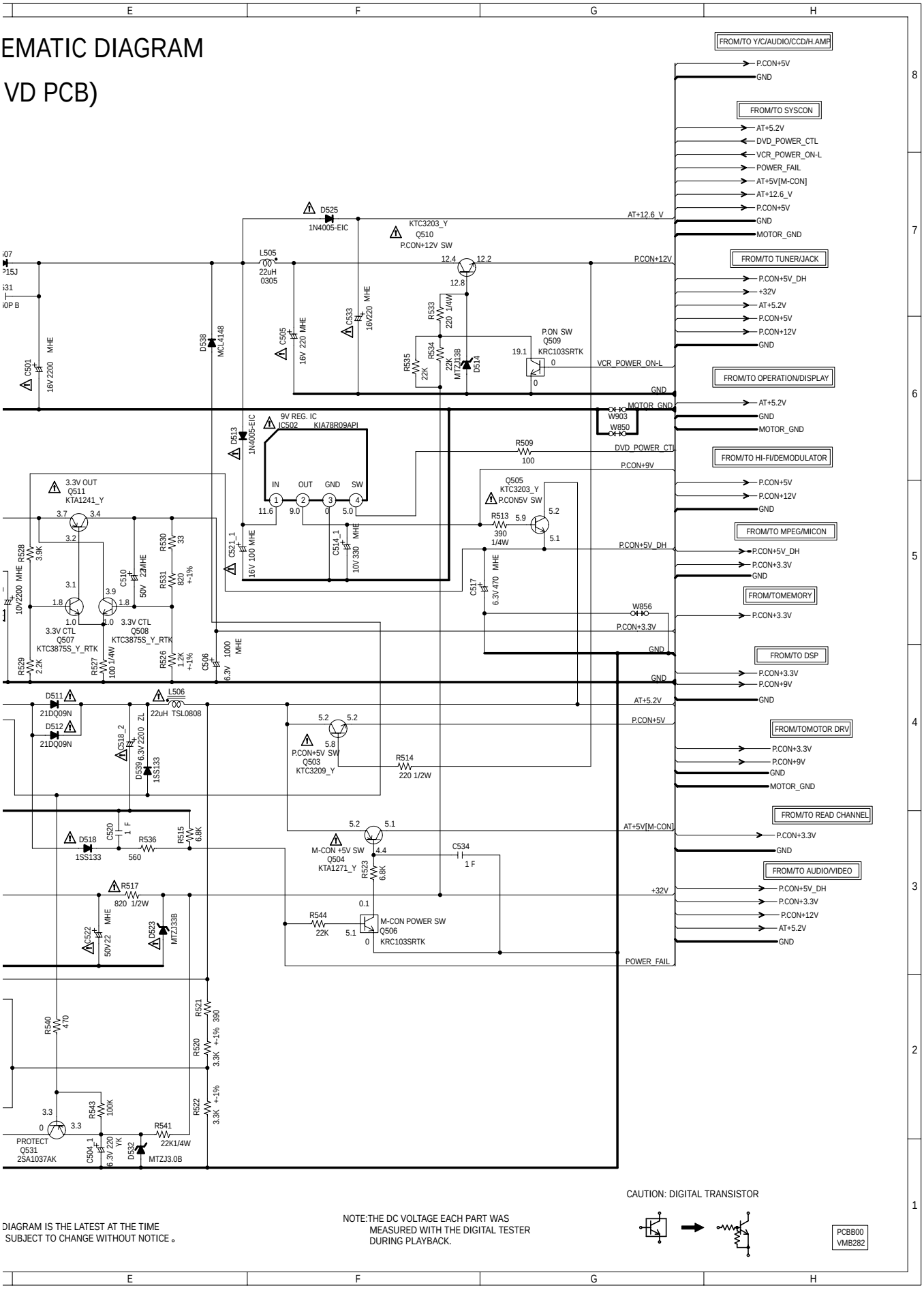

MPEG/MICON SCHEMATIC DIAGRAM

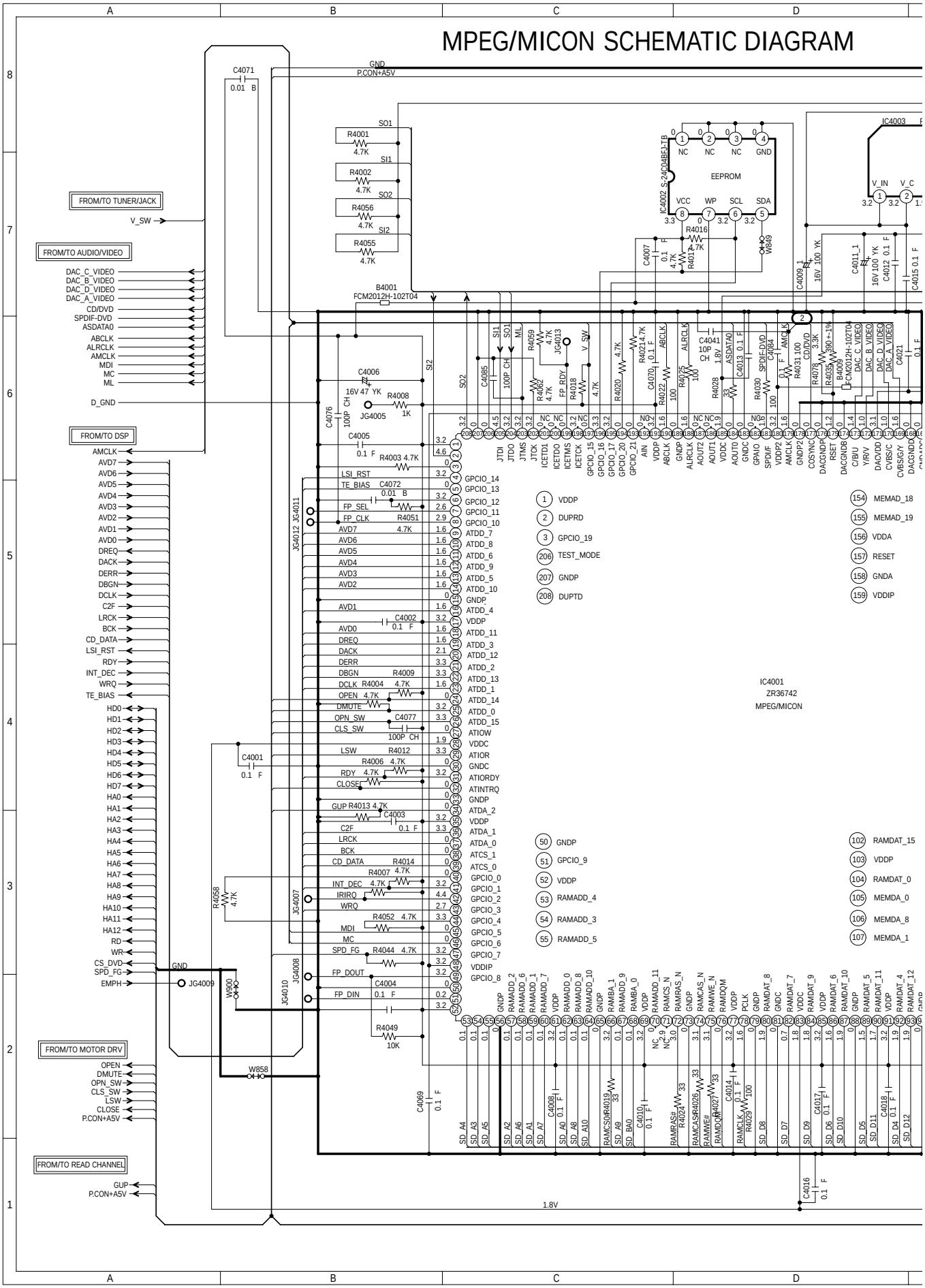

Note : The Parts Number, value and rated voltage etc. in the Schematic Diagram are for references only. When replacing the parts, refer to the Parts List.

(VCR/DVD PCB)

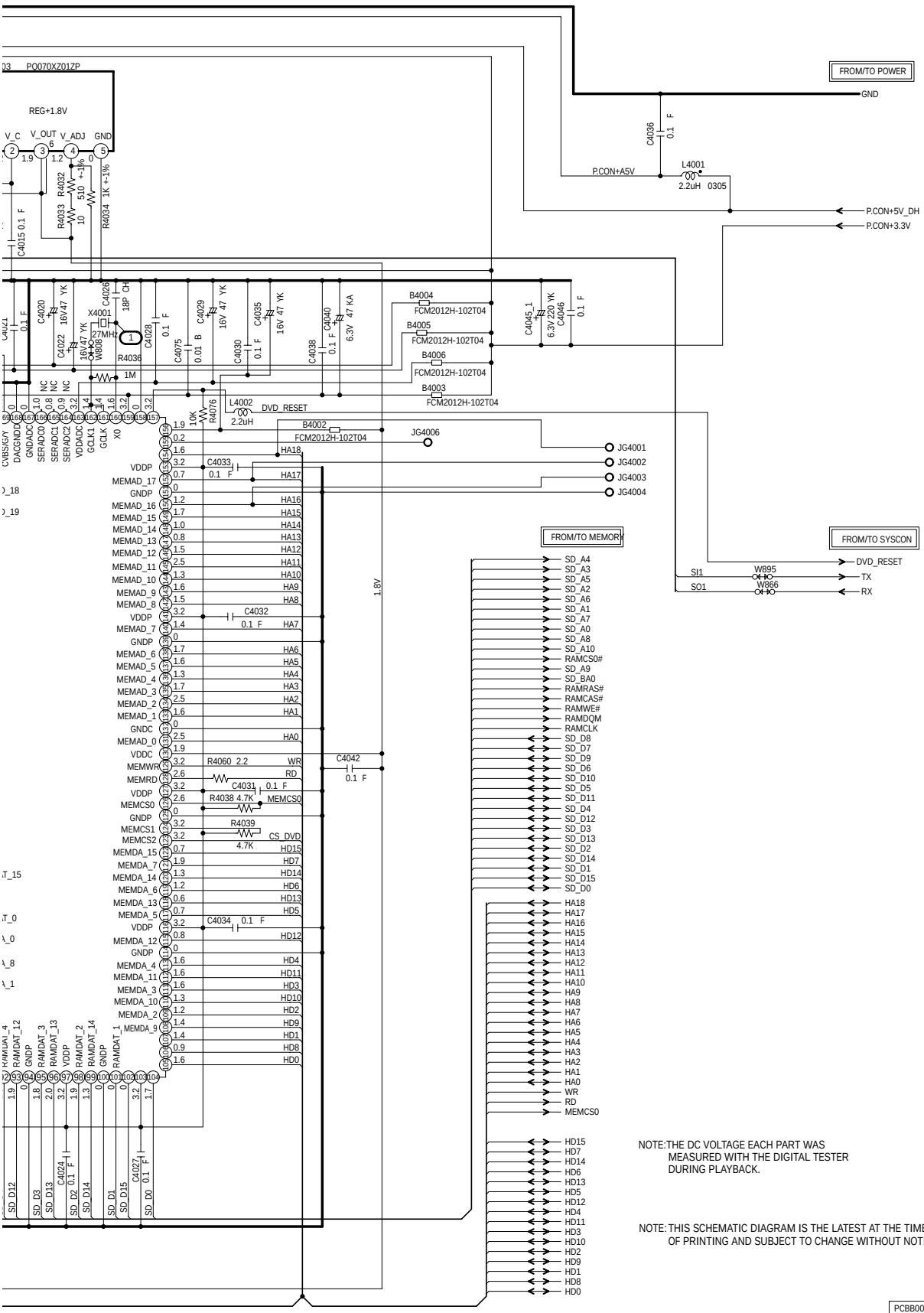

NOTE: THE DC VOLTAGE EACH PART WAS MEASURED WITH THE DIGITAL TESTER DURING PLAYBACK.

NOTE: THIS SCHEMATIC DIAGRAM IS THE LATEST AT THE TIME OF PRINTING AND SUBJECT TO CHANGE WITHOUT NOTICE。

MEMORY SCHEMA

(VCR/DVD PC

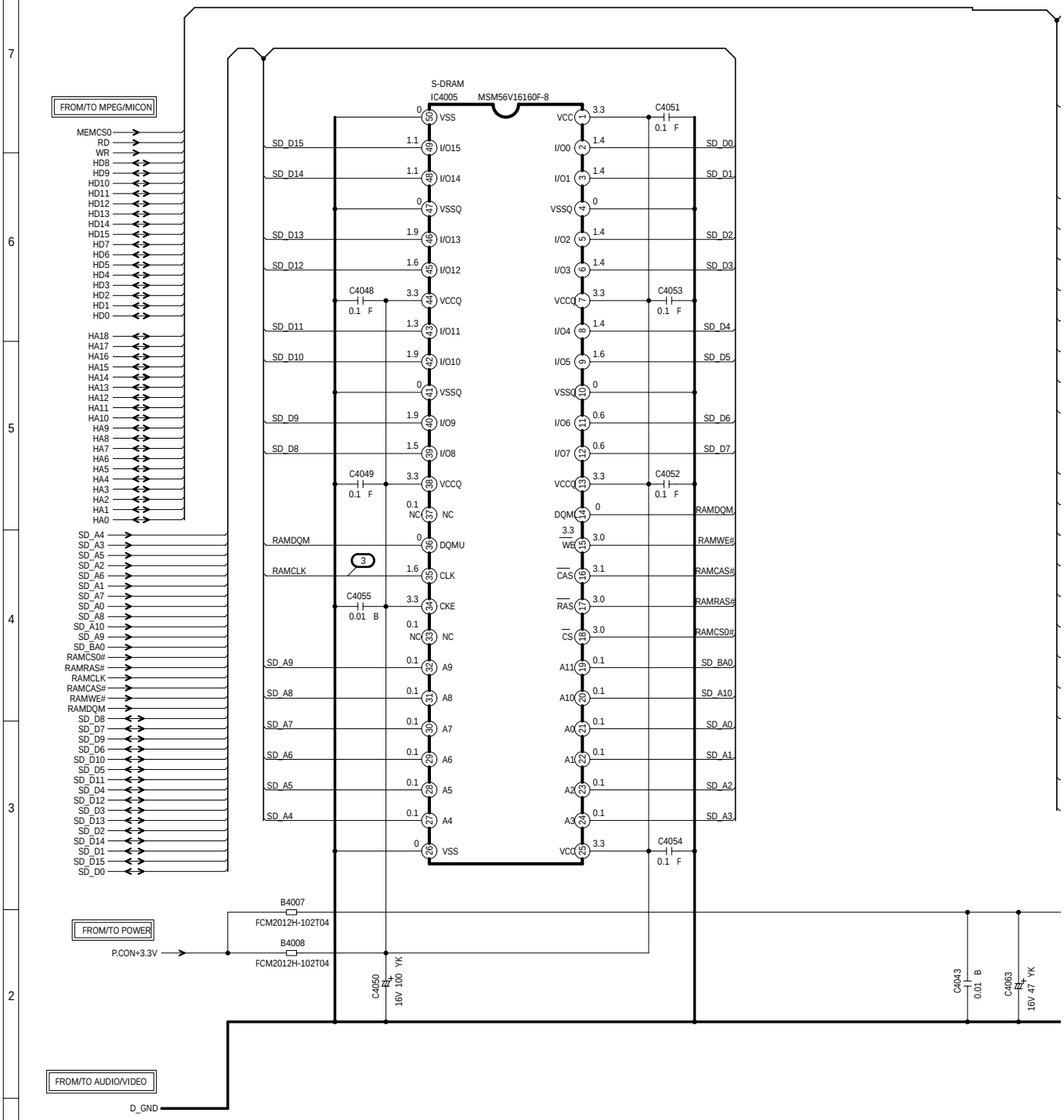

NOTE: THIS SCHEMATIC DIAGRAM IS THE LATEST AT THE TI
OF PRINTING AND SUBJECT TO CHANGE WITHOUT N

Note : The Parts Number, value and rated voltage etc. in the Schematic Diagram are for references only. When replacing the parts, refer to the Parts List.

MATIC DIAGRAM

PCB)

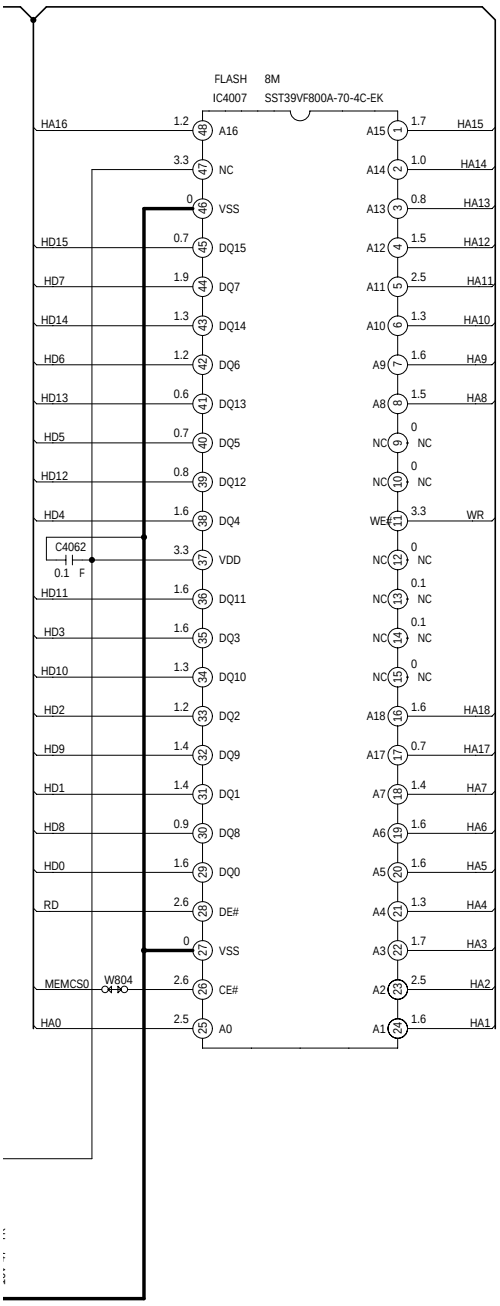

THE TIME
UT NOTICE。

NOTE:THE DC VOLTAGE EACH PART WAS MEASURED WITH THE DIGITAL TESTER DURING PLAYBACK.

PCBB00
VMB282

DSP SCHEMATIC DIAGRAM

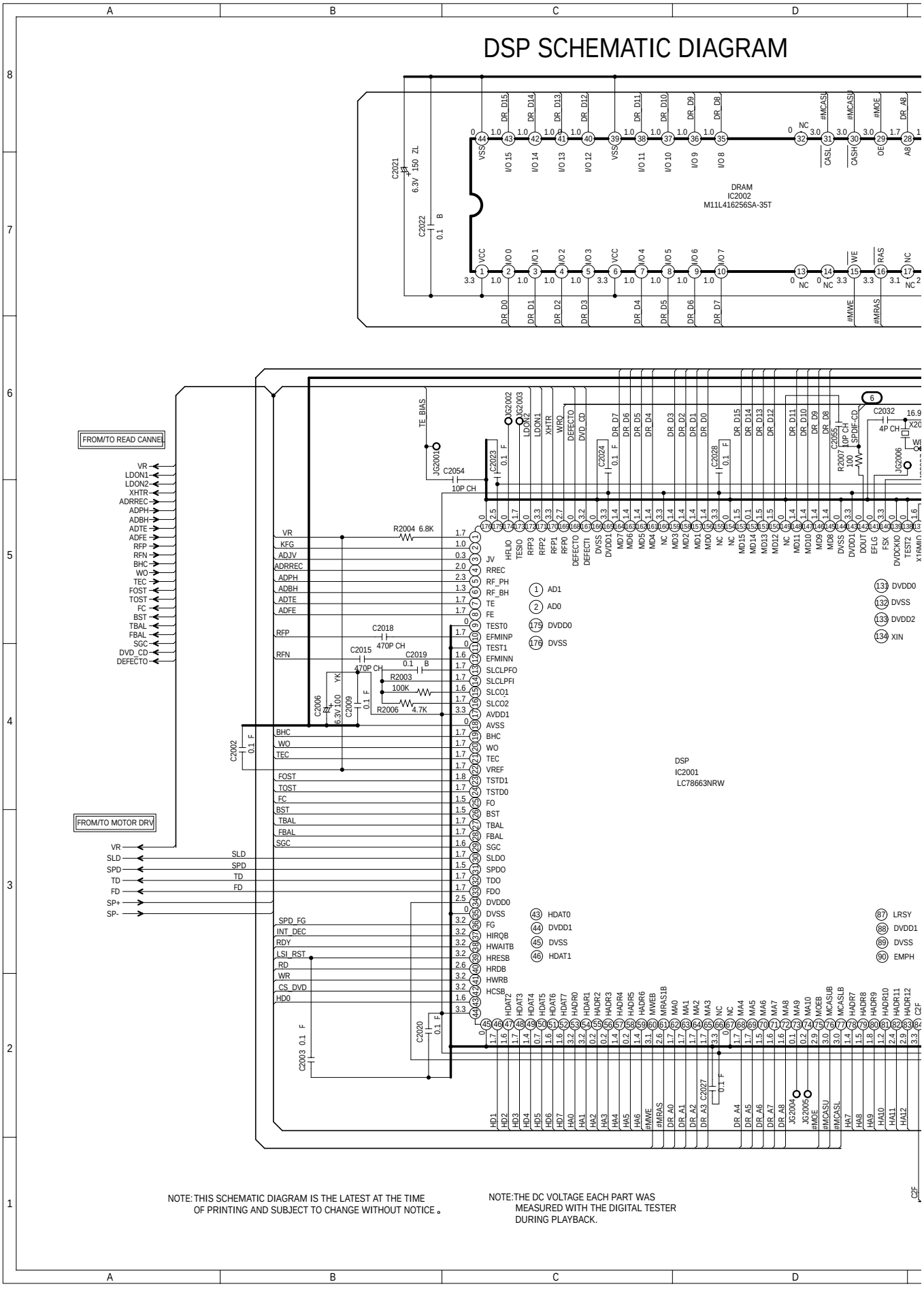

Note : The Parts Number, value and rated voltage etc. in the Schematic Diagram are for references only. When replacing the parts, refer to the Parts List.

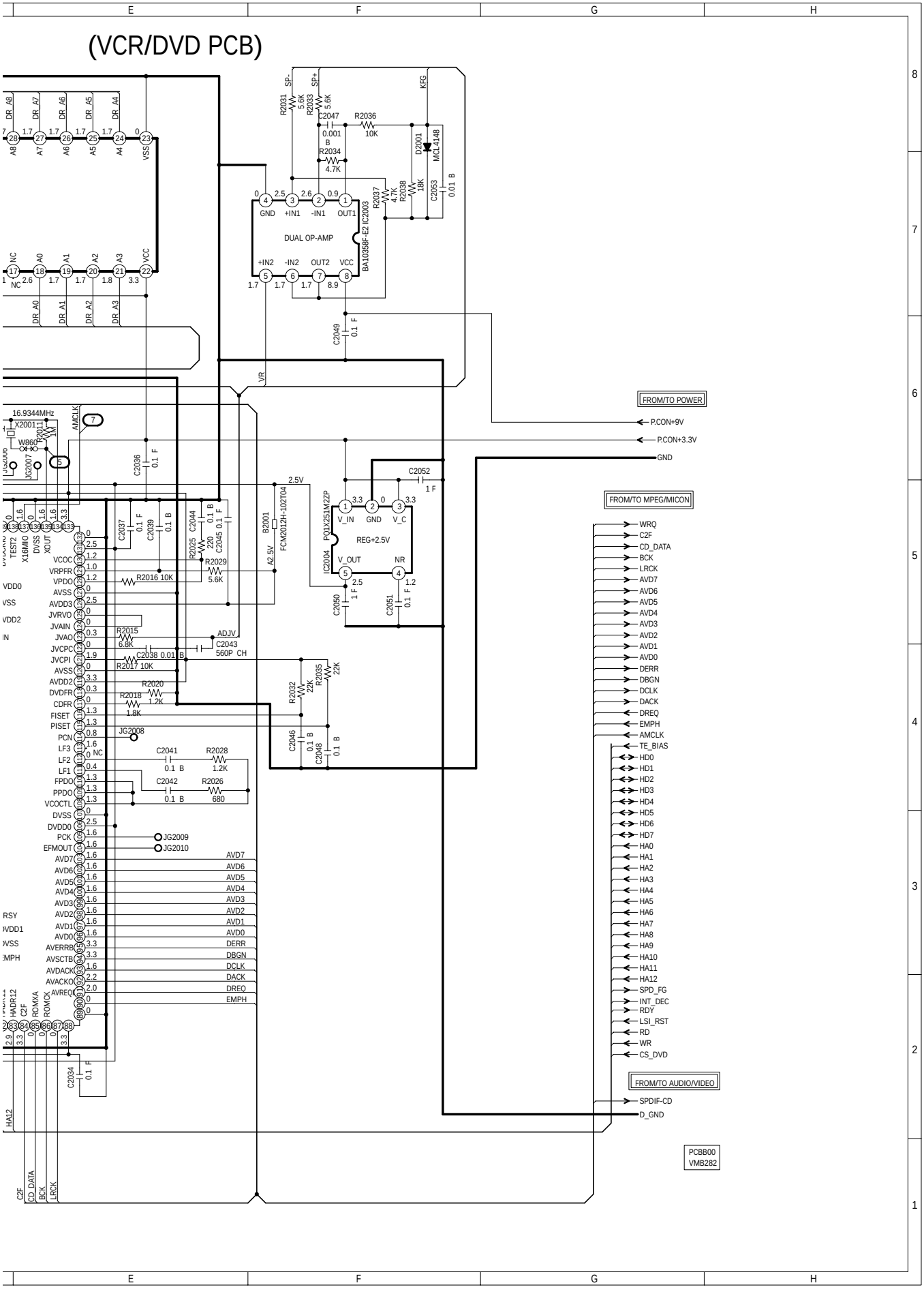

MOTOR DRV SCHE
(VCR/DVD P

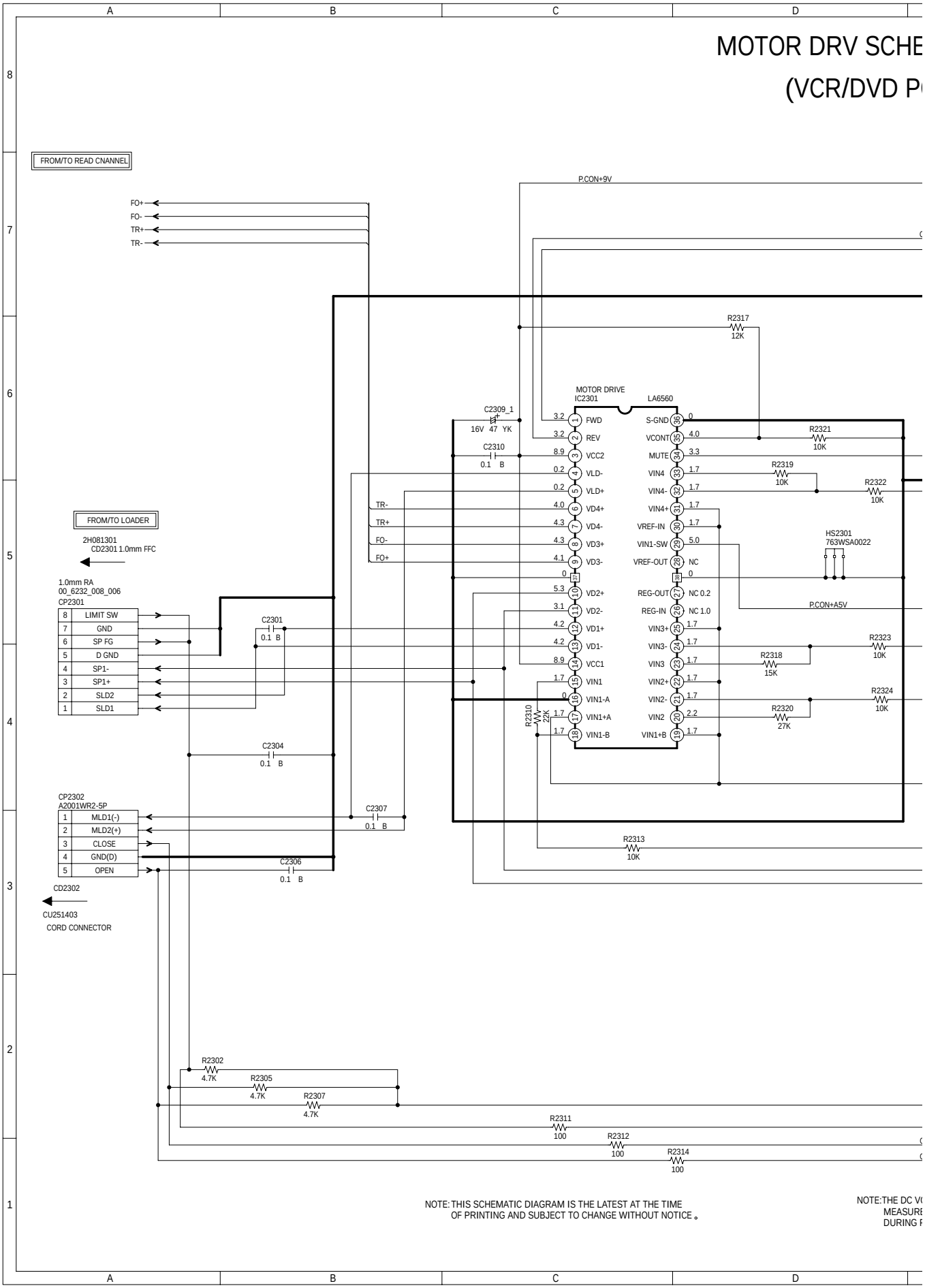

Note : *The Parts Number, value and rated voltage etc. in the Schematic Diagram are for references only. When replacing the parts, refer to the Parts List.*

HEMATIC DIAGRAM

PCB)

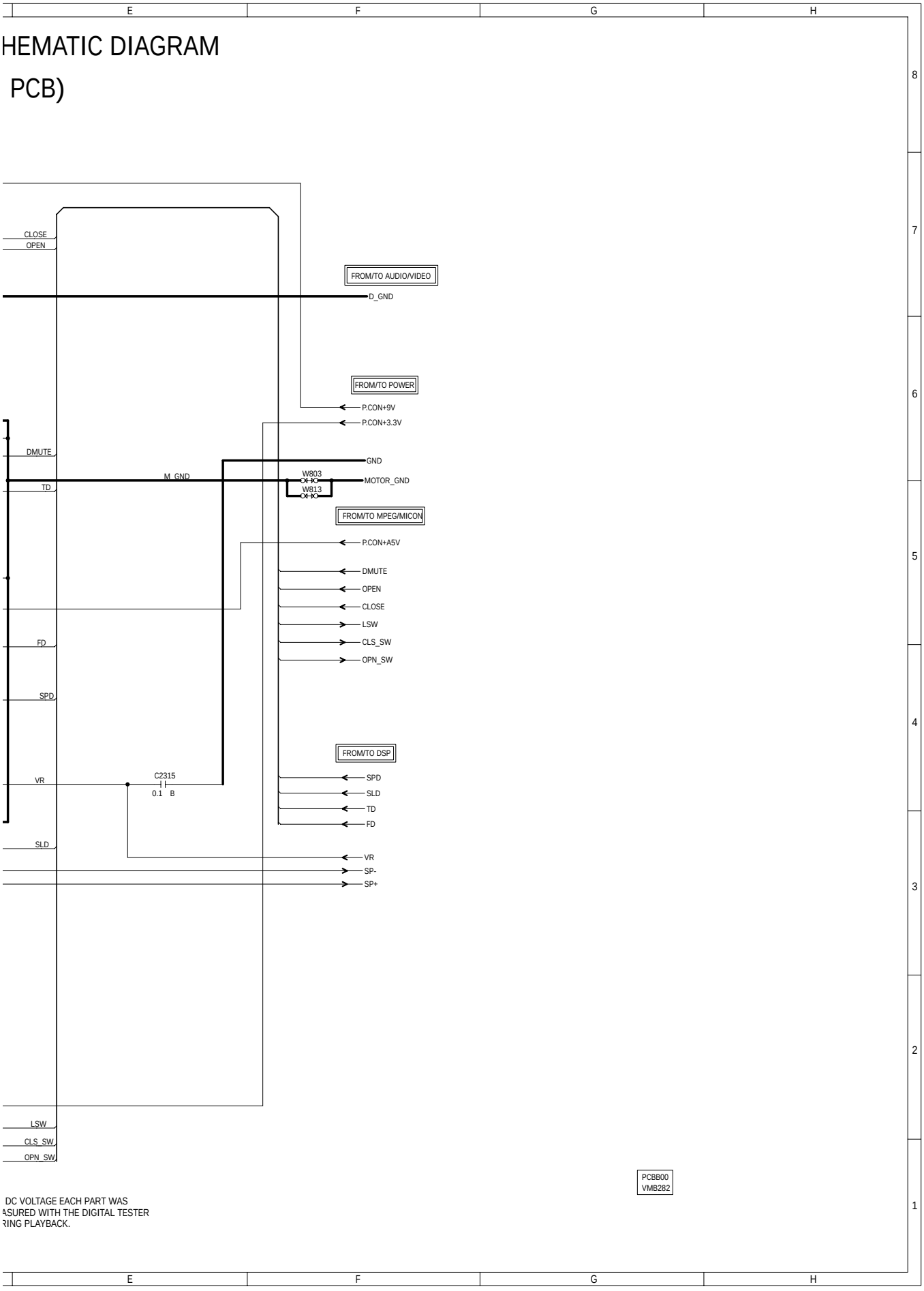

DC VOLTAGE EACH PART WAS
ASURED WITH THE DIGITAL TESTER
RING PLAYBACK.

READ CHANNEL SCHEM
(VCR/DVD PC

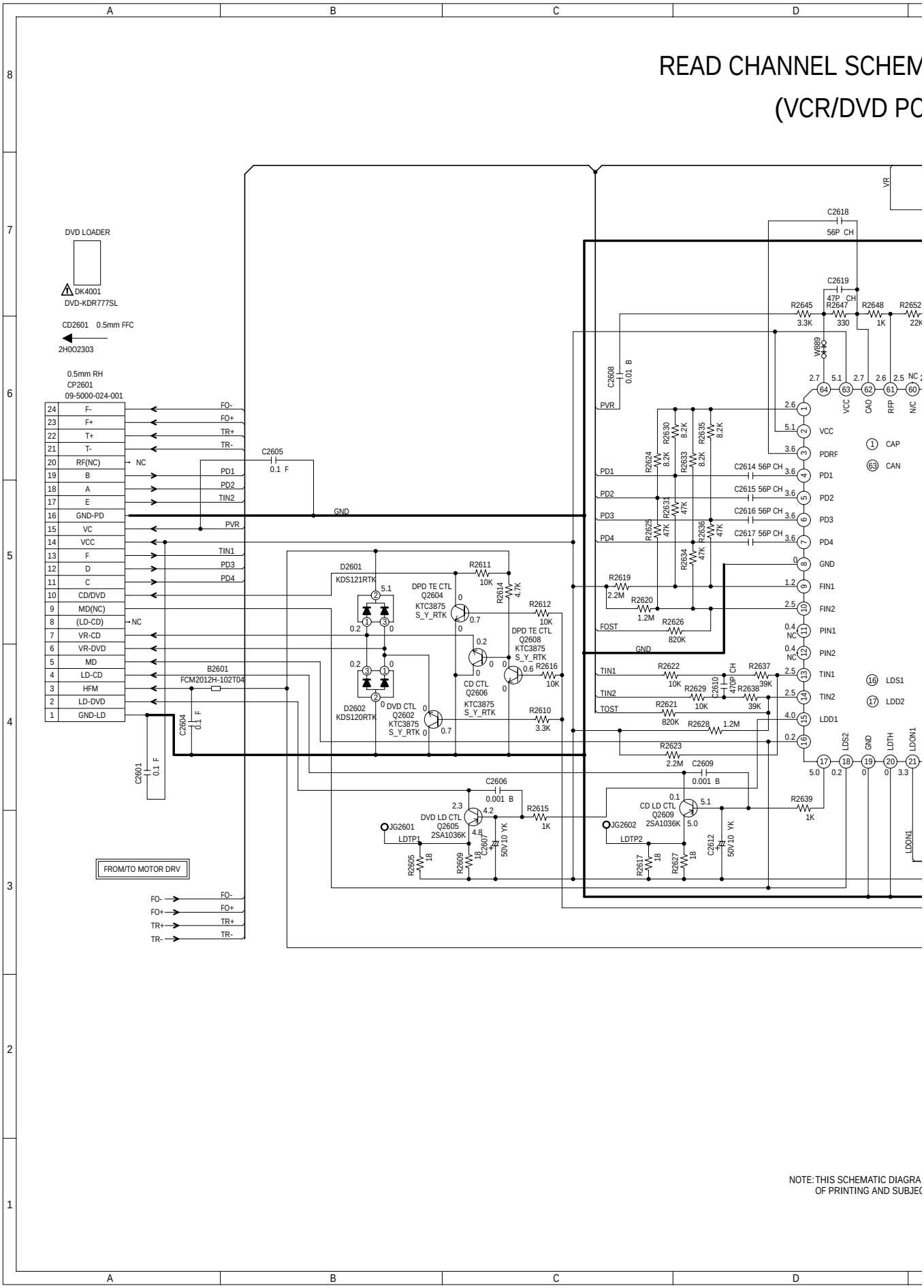

NOTE: THIS SCHEMATIC DIAGRA
OF PRINTING AND SUBJEC

Note : The Parts Number, value and rated voltage etc. in the Schematic Diagram are for references only. When replacing the parts, refer to the Parts List.

EMATIC DIAGRAM

PCB)

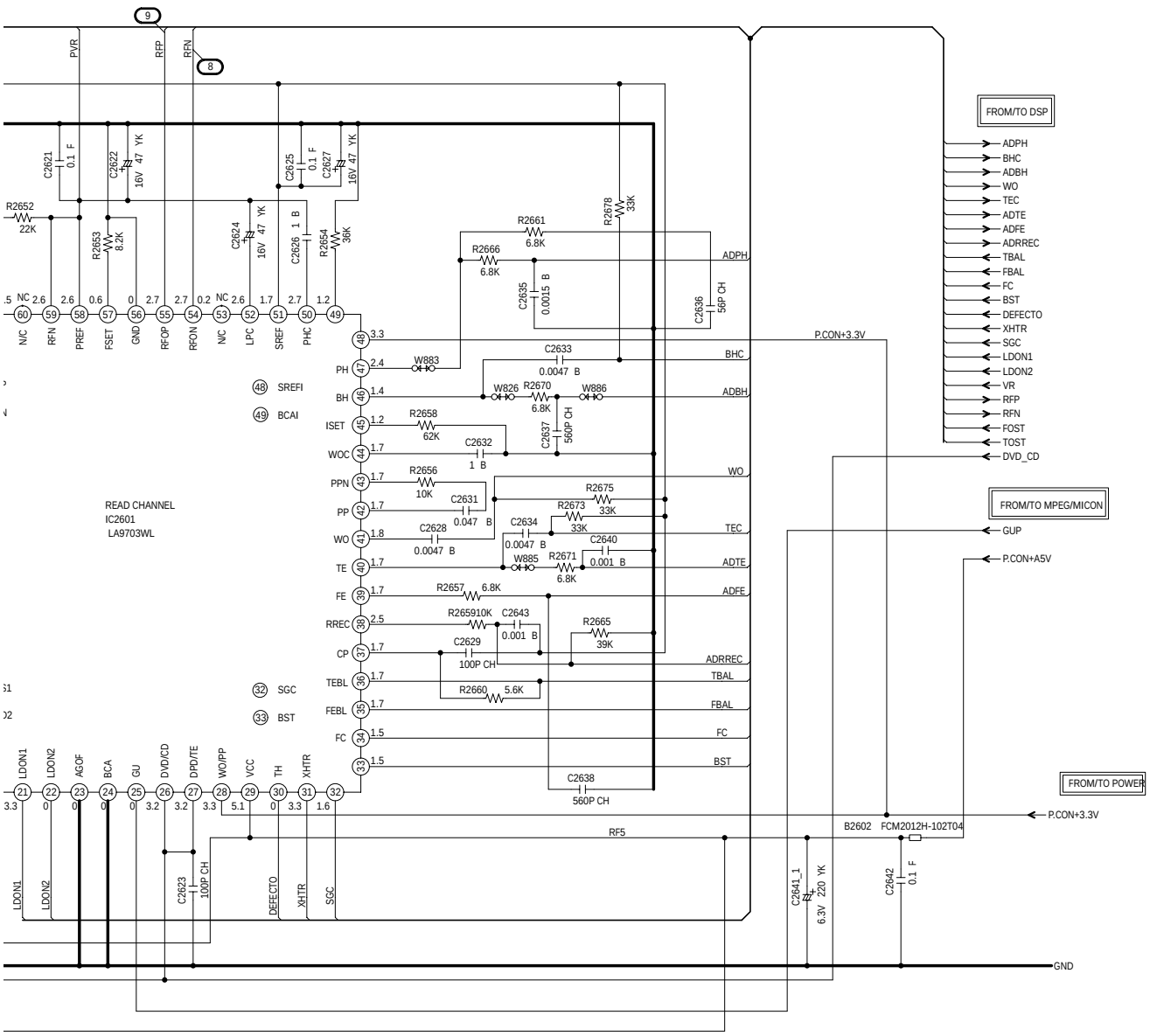

AGRAM IS THE LATEST AT THE TIME
UBJECT TO CHANGE WITHOUT NOTICE 。

NOTE:THE DC VOLTAGE EACH PART WAS MEASURED WITH THE DIGITAL TESTER DURING PLAYBACK.

PCBB00
VMB282

AUDIO/VIDEO SHEMAT

(VCR/DVD PCB)

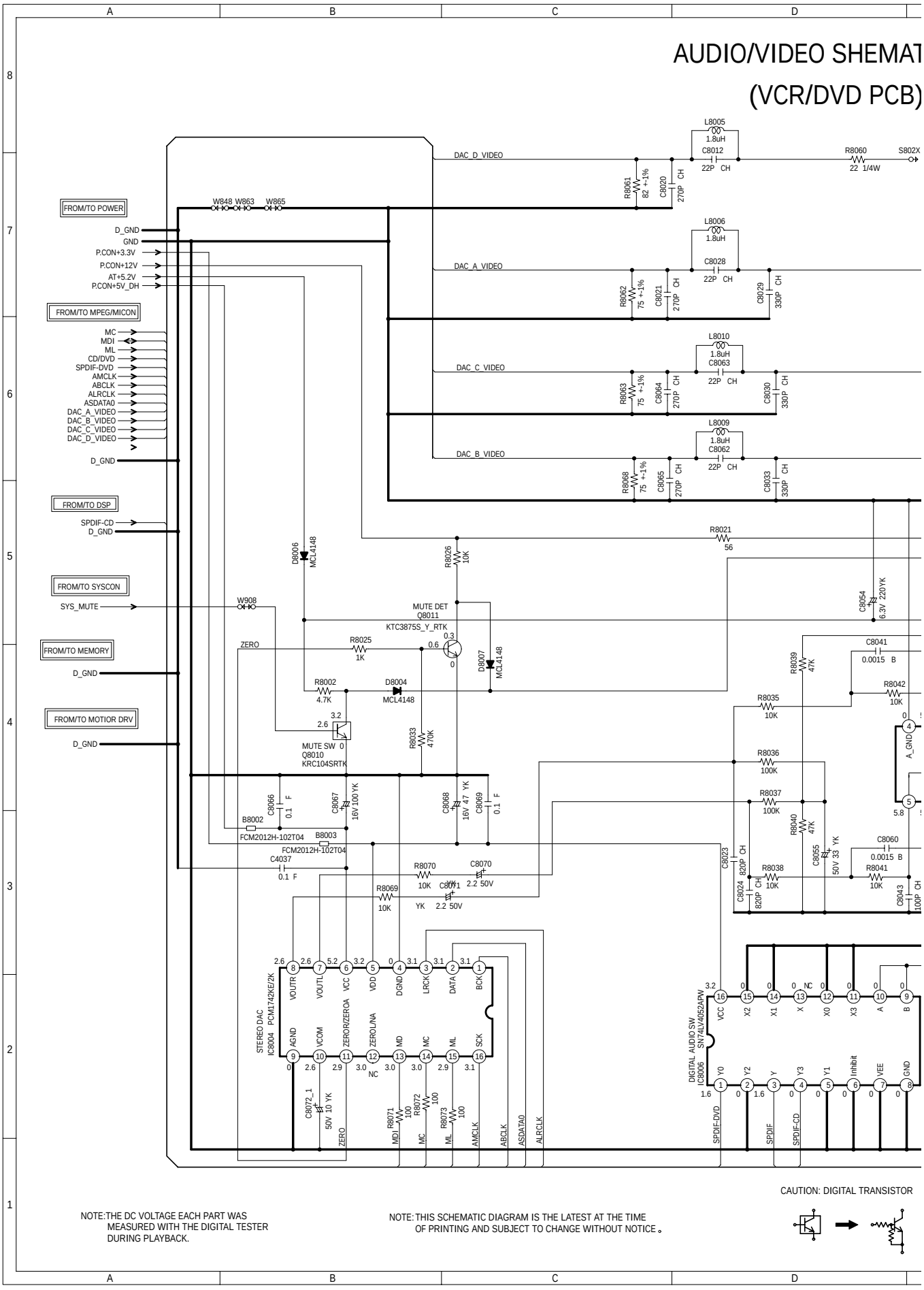

CAUTION: DIGITAL TRANSISTOR

NOTE:THE DC VOLTAGE EACH PART WAS MEASURED WITH THE DIGITAL TESTER DURING PLAYBACK.

NOTE: THIS SCHEMATIC DIAGRAM IS THE LATEST AT THE TIME OF PRINTING AND SUBJECT TO CHANGE WITHOUT NOTICE。

Note : *The Parts Number, value and rated voltage etc. in the Schematic Diagram are for references only. When replacing the parts, refer to the Parts List.*

ATIC DIAGRAM

:B)

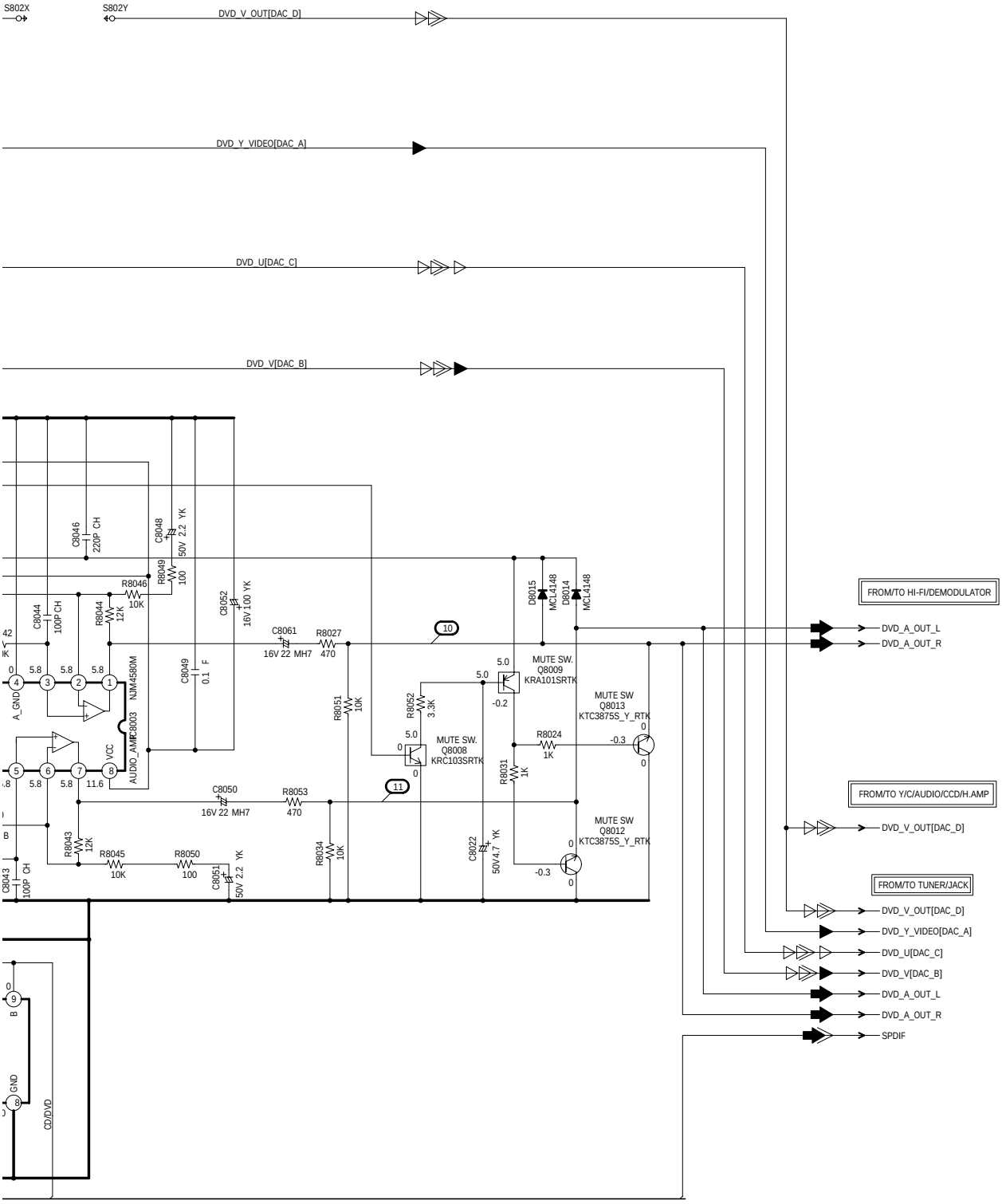

OPERATION SCHEM

(OPERATION F

(OPERATION F

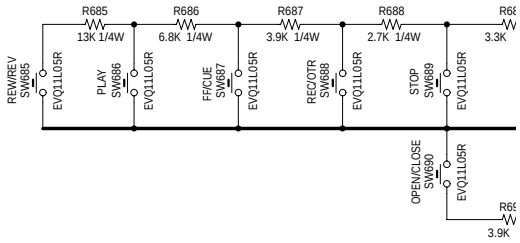

PCB270
VEBA07

NOTE:THE DC VOLTAGE EACH PART WAS
MEASURED WITH THE DIGITAL TESTER
DURING PLAYBACK.

Note : The Parts Number, value and rated voltage etc. in the Schematic Diagram are for references only. When replacing the parts, refer to the Parts List.

:MATIC DIAGRAM

N PCB)

N PCB)

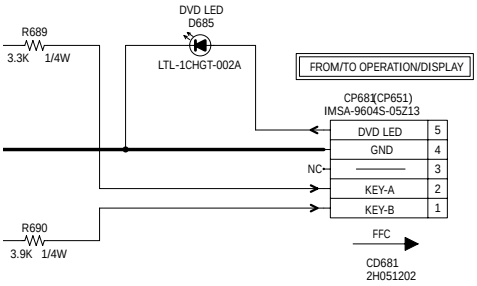

NOTE: THIS SCHEMATIC DIAGRAM IS THE LATEST AT THE TIME OF PRINTING AND SUBJECT TO CHANGE WITHOUT NOTICE 。

PRINTED CIRCUIT BOARDS
OPERATION
SOLDER SIDE

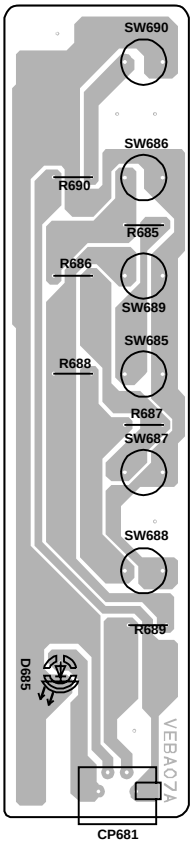

COMPONENT PARTS LOCATION GUIDE <VCR/DVD> VMB282A

REF.NO.	LOCATION
CAPACITOR	
C101_1	9I
C103	5D
C104	8I
C105	7E
C106	8I
C107	8H
C108	7E
C109	7E
C110	7I
C112	5I
C114	6I
C115	8E
C116	7E
C117	7E
C118	8E
C119	8D
C120	8D
C121	8E
C122	8E
C123	3G
C124	8E
C125	7F
C126	8F
C127	9D
C129	6D
C131	5G
C132	8F
C133	8G
C134	7H
C135	8G
C136	8G
C137	8G
C138	8G
C139	7F
C140	4H
C141	7G
C142	7H
C143	7G
C144	6G
C145	6G
C146	7G
C147	6G
C148	6H
C151	6G
C152	7G
C154	6F
C155	5G
C156	7F
C163	7E
C165	6E
C166	6F
C169	6E
C172	8H
C301	2B
C303	1C
C309	2B
C313	1F
C315	2B
C316	1D
C318	2B
C501	14B
C502	20C
C504_1	12B
C505	13C
C506	12C
C508	17B
C509	19B
C510	12B
C511_2	19E
C513	18C
C514_1	13C
C515	18C
C516	19B
C517	13C
C518_2	14D
C519_1	14C
C520	15E
C521_1	14B
C522	16D
C524	14A
C525	19C
C527	18B
C528_1	19B
C529	20E
C531	14B
C533	17F
C534	11C
C652	12O
C701	2E
C702	3F
C703	3E
C704	3E
C705	2E
C706	3E
C707	3E
C708	3E
C709	3D
C711	3D
C713	3D
C714	4D
C715	3D
C716	4D
C719	4D
C720	4D
C721	4D
C722	6E
C723	5E
C724	6D
C725	5D
C726	5D
C727	5D
C728	4E
C729	5E
C730	5E
C731	6E
C732	6E
C734	4G

REF.NO.	LOCATION
C735	4G
C736	4G
C737	4F
C738	5F
C739	5F
C740	5F
C741	5F
C742	5E
C743	4G
C744	4G
C746	3G
C747	3G
C748	3G
C749	3F
C750	3F
C751	4F
C752	2F
C754	3G
C755	2E
C756	2F
C757	2B
C758	2F
C759	3F
C760	3F
C762	3E
C763	3E
C2002	18I
C2003	18I
C2006	17G
C2009	18I
C2015	19I
C2018	19I
C2019	19I
C2020	17I
C2021	19M
C2022	19L
C2023	19I
C2024	19J
C2027	17J
C2028	19J
C2032	20K
C2034	17K
C2036	21I
C2037	19K
C2038	18L
C2039	19L
C2041	17K
C2042	18K
C2043	19L
C2044	19L
C2045	19L
C2046	18L
C2047	21M
C2048	18K
C2049	21M
C2050	17L
C2051	17L
C2052	18L
C2053	21M
C2054	13K
C2055	13I
C2301	22K
C2304	22L
C2306	21L
C2307	22L
C2309_1	19N
C2310	20N
C2315	20M
C2601	21J
C2604	22I
C2605	21J
C2606	21J
C2607	21K
C2608	21G
C2609	21J
C2610	19G
C2612	20K
C2614	21G
C2615	22G
C2616	22G
C2617	22G
C2618	20G
C2619	21G
C2621	20H
C2622	21H
C2623	19H
C2624	21I
C2625	21H
C2626	20H
C2627	21H
C2628	20I
C2629	19H
C2631	20H
C2632	20I
C2633	20H
C2634	20H
C2635	21H
C2636	21I
C2637	20I
C2638	19I
C2640	19I
C2641_1	19G
C2642	19G
C2643	20I
C3001	7L
C3004	7M
C3005	1I
C3006	9K
C3007	8M
C3008	8N
C3009	6M
C3010	7K
C3013	11L
C3014	5N
C3015	7L
C3016	11L
C3017	9M
C3018	7L

REF.NO.	LOCATION
C3019	8L
C3020	6M
C3021	5N
C3022	10L
C3023	5N
C3024	6M
C3025	6M
C3027	8L
C3029	12K
C3030	7O
C3031	8M
C3032	11L
C3033_1	15H
C3034	9L
C3036	9M
C3038	9L
C3040	16F
C3041	8L
C3044	8M
C3045	6N
C3046	6O
C3047	6O
C3049	8M
C3050	6M
C3052	12L
C3053	6M
C3061	8M
C3065	9L
C4001	12E
C4002	12E
C4003	11E
C4004	11F
C4005	13F
C4006	16G
C4007	12E
C4008	11F
C4009_1	15H
C4010	11E
C4011_1	16H
C4012	15H
C4013	12F
C4014	11F
C4015	15H
C4016	11G
C4017	11G
C4018	11G
C4020	16G
C4021	14H
C4022	15G
C4024	11G
C4026	13H
C4027	11G
C4028	14H
C4029	15G
C4030	13I
C4031	11H
C4032	12H
C4033	13H
C4034	11H
C4035	16G
C4036	18N
C4037	9E
C4038	14H
C4040	14H
C4041	13G
C4042	12H
C4043	9H
C4045_1	11D
C4046	11E
C4048	9G
C4049	9G
C4050	10E
C4051	10G
C4052	10G
C4053	10G
C4054	10F
C4055	9F
C4062	10H
C4063	10D
C4069	11E
C4070	12F
C4071	16F
C4072	12E
C4075	13G
C4076	12F
C4077	12G
C4084	13G
C4085	13F
C8010	6B
C8012	15F
C8013	4C
C8015	3B
C8019	3N
C8020	15F
C8021	15F
C8022	6C
C8023	7C
C8024	7C
C8025	11B
C8026	11A
C8027	12A
C8028	16F
C8029	16F
C8030	14F
C8031	5L
C8032	4L
C8033	13E
C8037	8B
C8038	9B
C8039	10B
C8041	6C
C8043	6C
C8044	6C
C8046	6B
C8048	8B
C8049	6C
C8050	5C
C8051	7C

REF.NO.	LOCATION
C8052	6C
C8053	4L
C8054	6B
C8055	7C
C8057	4L
C8060	7C
C8061	5C
C8062	15F
C8063	14F
C8064	14F
C8065	14F
C8066	10D
C8067	10D
C8068	10D
C8069	10E
C8070	8C
C8071	8C
C8072_1	10D
C8075	3I
C8094	6B
C8095	6B
C8096	7B
C8097	7B
C8098	8A
C8099	3P
C8100	5P
CONNECTOR	
CP101	7D
CP102	9D
CP103	1H
CP651	21O
CP2301	22K
CP2302	22L
CP2601	22J
CP3001	14G
DIODE	
D502	22F
D503	21F
D504	19C
D505	22E
D506	20E
D507	15B
D509	17D
D510	20C
D511	14E
D512	14E
D513	13B
D514	12D
D515	15D
D518	15D
D522	15D
D523	16E
D524	18B
D525	14D
D530	18B
D531	19B
D532	15A
D534	14B
D535	16A
D536	14C
D537	14C
D538	14B
D539	14D
D651	6P
D656	15N
D701	5E
D702	3G
D2001	21M
D2601	21K
D2602	21K
D3001	9J
D3007	8K
D3009	6N
D8002	3O
D8004	8C
D8006	8C
D8007	7C
D8008	4H
D8011	9C
D8012	9B
D8013	10C
D8014	6B
D8015	5B
D8016	9C
D8017	9B
D8018	9B
FUSE	
F501	22D
IC	
IC101	8F
IC501	14A
IC502	13B
IC503	18A
IC701	4E
IC2001	18J
IC2002	18L
IC2003	21M
IC2004	17L
IC2301	20N
IC2601	20H
IC3001	8M
IC3003	6N
IC3099	7O
IC4001	12G
IC4002	12E
IC4003	15H
IC4005	9F
IC4007	11I
IC8003	6C
IC8004	10E
IC8005	4L
IC8006	10E
COIL	

REF.NO.	LOCATION
L101	8I
L102	7I
L105_1	6H
L106_1	6F
L107	6E
L301	1F
L501	20D
L505	13B
L506	14D
L701_1	4G
L702_1	4G
L703	3G
L3003	8L
L4001	16G
L4002	13H
L8001	9B
L8002	7B
L8003	9B
L8004	4L
L8005	15F
L8006	16F
L8007	8B
L8009	15F
L8010	14F
TRANSISTOR	
Q101	8D
Q102	8E
Q103	8H
Q104	8H
Q105	5H
Q106	8H
Q107	8G
Q109	6G
Q301	1B
Q303	1E
Q501	18D
Q502	19C
Q503	11B
Q504	11C
Q505	13C
Q506	11C
Q507	13B
Q508	13B
Q509	13D
Q510	13D
Q511	12C
Q530	15A
Q531	15A
Q651	13N
Q652	13O
Q653	13O
Q654	13N
Q655	14O
Q656	14O
Q657	14O
Q658	14O
Q659	14N
Q660	14N
Q661	15O
Q662	14N
Q663	13N
Q664	13N
Q665	15O
Q666	19O
Q2602	21L
Q2604	21L
Q2605	21J
Q2606	21K
Q2608	21L
Q2609	21J
Q3001	6L
Q3002	11M
Q3003	9O
Q3004	14M
Q3005	13M
Q3006	1I
Q3007	9O
Q3008	16I
Q8001	7B
Q8002	7B
Q8003	4C
Q8004	4B
Q8005	5B
Q8006	5B
Q8007	5B
Q8008	6C
Q8009	6B
Q8010	8C
Q8011	7C
Q8012	5C
Q8013	5B
RESISTOR	
R101	9H
R102	8E
R103	8D
R105	7D
R106	7E
R107	8I
R108	6H
R109	8E
R110	8E
R111	8E
R112	8E
R113	7E
R114	8E
R115	8E
R116	8E
R117	8E
R119	9D
R120	8H
R121	8H
R122	7F
R123	7G
R124	7G
R126	7H
R127	7G

REF.NO.	LOCATION
R129	6G
R131	7G
R132	6G
R133	6G
R136	4I
R137	4H
R138	4K
R139	3K
R141	4I
R142	7E
R143	4I
R301	2B
R302	3C
R304	2B
R305	2B
R501	20B
R502	20D
R503	21E
R504	19B
R506	19E
R507	17B
R508	19C
R509	12C
R510	15A
R512	17D
R513	12D
R514	11C
R515	12C
R516	18C
R517	15E
R518	16B
R519	16B
R520	15B
R521	16B
R522	14A
R523	11C
R524	18B
R525	20B
R526	13B
R527	13B
R528	13B
R529	12B
R530	12B
R531	12B
R533	13D
R534	13D
R535	13D
R536	15E
R537	18C
R538	18C
R540	13B
R541	14D
R542	16A
R543	13B
R544	11C
R651	13O
R653	7P
R657	10P
R658	9P
R659	10O
R661	13N
R662	13O
R663	13O
R664	13N
R665	14O
R666	14O
R667	14O
R668	14O
R669	14N
R670	15O
R671	14N
R672	15P
R673	15O
R674	13N
R675	15N
R683	20O
R701	3E
R702	2D
R703	2E
R704	2D
R707	4D
R708	3D
R711	4D
R712	4D
R714	5F
R716	4G
R717	3G
R718	2F
R719	2E
R720	3F
R721	2E
R722	2D
R723	3H
R2003	18I
R2004	19I
R2006	18I
R2007	19L
R2011	19K
R2015	19K
R2016	19K
R2017	18K
R2018	18L
R2020	18L
R2025	19K
R2026	18L
R2028	17L
R2029	19K
R2031	21M
R2032	18L
R2033	21M
R2034	21M
R2035	18K
R2036	21M
R2037	21M
R2038	21M
R2302	21L
R2305	21L
R2307	21L

REF.NO.	LOCATION
R2310	20M
R2311	21L
R2312	21L
R2313	21M
R2314	21L
R2317	20N
R2318	19N
R2319	19N
R2320	19M
R2321	19N
R2322	19N
R2323	19M
R2324	19M
R2605	21J
R2609	21J
R2610	20L
R2611	21K
R2612	21L
R2614	21K
R2615	21J
R2616	21L
R2617	21J
R2619	20G
R2620	20G
R2621	19H
R2622	19G
R2623	19G
R2624	21G
R2625	21G
R2626	19H
R2627	21J
R2628	19G
R2629	19G
R2630	21G
R2631	21G
R2633	22G
R2634	22G
R2635	21G
R2636	21G
R2637	19G
R2638	19G
R2639	21J
R2645	21G
R2647	20G
R2648	21G
R2652	20G
R2653	20H
R2654	21H
R2656	20I
R2657	19I
R2658	20H
R2659	19H
R2660	19H
R2661	21I
R2665	19H
R2666	21I
R2670	20I
R2671	20I
R2673	20I
R2675	20I
R2678	20I
R3001	7M
R3002	12L
R3003	14G
R3004	8K
R3006	12L
R3007	7K
R3008	8N
R3009	9N
R3010	8M
R3011	9N
R3012	7L
R3014	7M
R3015	9M
R3016	8J
R3017	7K
R3019	6L
R3020	7K
R3022	7L
R3024	7L
R3025	8M
R3026	1I
R3027	8L
R3028	8O
R3029	9O
R3030	10L
R3031	7M
R3032	7M
R3033	6M
R3034	6M
R3035	16F
R3037	5O
R3038	9M
R3043	8M
R3044	7O
R3045	8O
R3046	9M
R3047	9M
R3049	6M
R3050	14L
R3051	6N
R3053	8M
R3055	9M
R3056	8L
R3057	6M
R3062	6N
R3063	9L
R3083	14M
R3087	14L
R4001	14F
R4002	14F
R4003	13E
R4004	12E
R4006	11F
R4007	11F
R4008	13E
R4009	12F
R4012	12G

REF.NO.	LOCATION
R4013	10H
R4014	11F
R4016	12E
R4017	12E
R4018	14G
R4019	10F
R4020	13F
R4021	13F
R4022	13F
R4024	10F
R4025	13F
R4026	10F
R4027	10F
R4028	13F
R4029	10F
R4030	13G
R4031	13G
R4032	15H
R4033	15H
R4034	15H
R4035	13G
R4036	13H
R4038	11H
R4039	10H
R4044	10H
R4049	11E
R4051	12F
R4052	11F
R4055	14F
R4056	14F
R4058	11E
R4059	13F
R4060	10H
R4062	13F
R4076	13H
R4078	13G
R8002	8C
R8003	6A
R8004	7B
R8005	7A
R8006	7B
R8007	7B
R8008	10B
R8009	4C
R8010	3B
R8011	5C
R8014	5B
R8015	5B
R8016	5C
R8017	5B
R8019	2P
R8020	10A
R8021	5C
R8023	10B
R8024	5B
R8025	9C
R8026	7C
R8027	5C
R8028	9B
R8029	9B
R8030	10B
R8031	5C
R8032	5B
R8033	7B
R8034	4C
R8035	7C
R8036	7C
R8037	7C
R8038	7C
R8039	6C
R8040	7C
R8041	6C
R8042	6C
R8043	7C
R8044	7C
R8045	7C
R8046	7C
R8049	7C
R8050	7C
R8051	4C
R8052	6C
R8053	5C
R8054	5C
R8055	5B
R8056	6B
R8059	3I
R8060	14F
R8061	13G
R8062	15F
R8063	14F
R8065	5B
R8067	5A
R8068	14F
R8069	9D
R8070	10D
R8071	11E
R8072	11E
R8073	11E
R8078	10A
SWITCH	
SW651	11P
SW652	1P
SW653	9P
SW654	8P
SW655	7P
SW3001	4O
SW7001	10A
TEST POINT	
TP101	2K
TP701	2K
TP3001	2K
TP3002	2K
TP8001	5B
OTHER	
B2601	21I

REF.NO.	LOCATION
B2602	17G
B4001	16G
B4002	15G
B4003	14H
B4004	16G
B4005	15G
B4006	15H
B4007	10D
B4008	10E
B4009	13H
B501	17C
B8001	6B
B8002	10D
B8003	10D
CD501_4	?B
FH501	22C
FH502	22D
HS2301	20N
HS501	18E
J8001	5A
J8003	3P
J8004	4P
J8005	5P
J8006	9A
J8007	6A
J8008	12A
JG2001	20J
JG2002	19I
JG2003	19I
JG2004	17J
JG2005	17J
JG2006	20K
JG2007	20K
JG2008	18K
JG2009	18K
JG2010	17K
JG2601	21J
JG2602	21J
JG3001	7N
JG3002	4M
JG3003	11O
JG3004	10O
JG3005	5M
JG3006	4N
JG3007	4N
JG3008	5M
JG4001	13H
JG4002	12H
JG4003	12H
JG4004	12H
JG4005	13E
JG4006	13H
JG4007	11E
JG4008	11E
JG4009	17K
JG4010	11E
JG4011	12E
JG4012	12E
JG4013	14F
OS651	12P
OS8001	7B
S501	21B
S502	20C
S801X	7I
S801Y	3B
S802X	14F
S802Y	9I
T501	17C
TU301	1B
V651	13P
X101	6G
X2001	19K
X3001	6M
X3002	6N
X4001	13G

PRINTED CIRCUIT
VCR/DVD (TOP

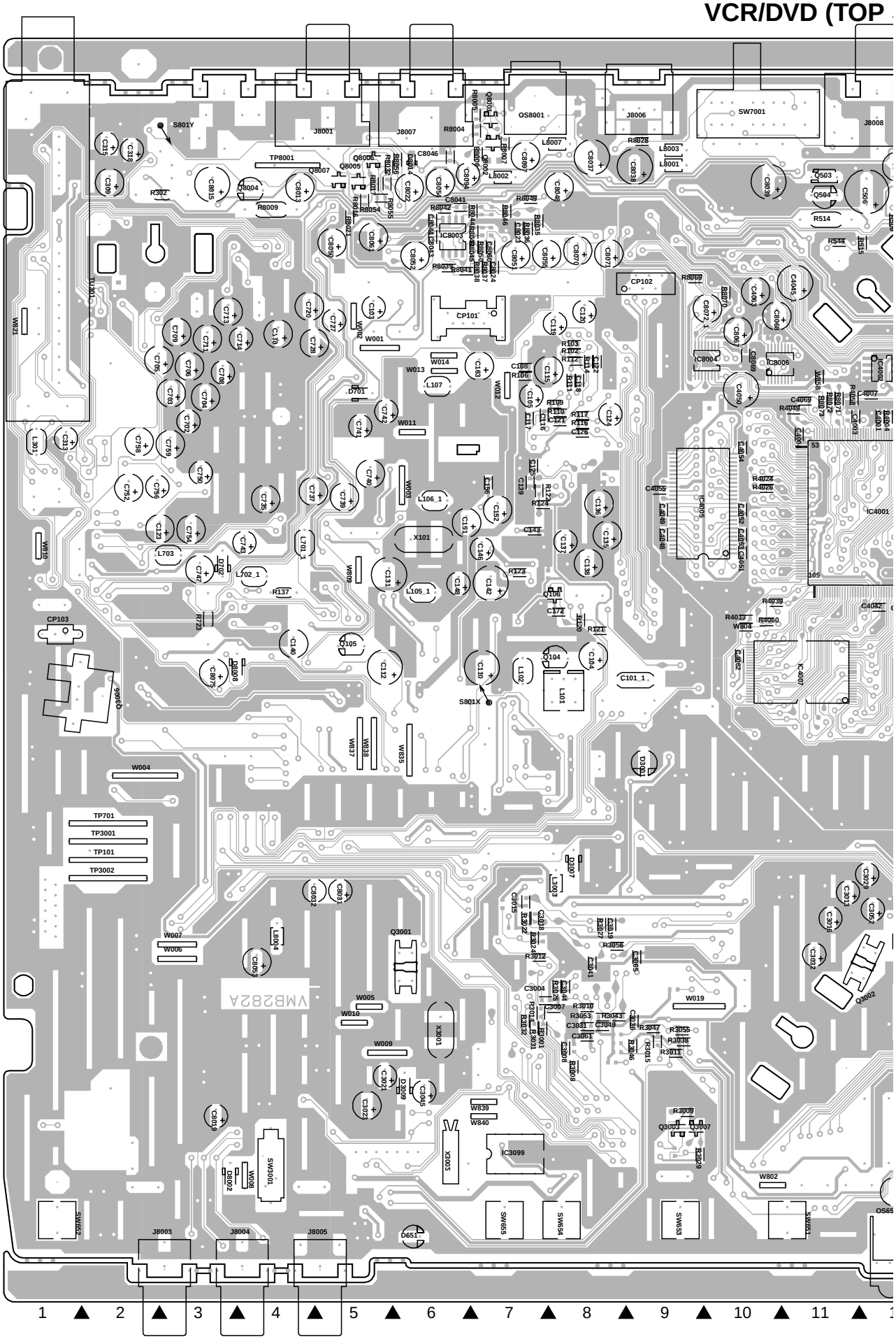

T BOARDS
P SIDE)

CAUTION :
FOR CONTINUED PROTECTION AGAINST FIRE HAZARD, REPLACE ONLY WITH SAME TYPE AND RATED FUSE(S).
ATTENTION :
REPLACER PAR DES FUSIBLE DE MEME TYPE.

DANGEROUS VOLTAGE

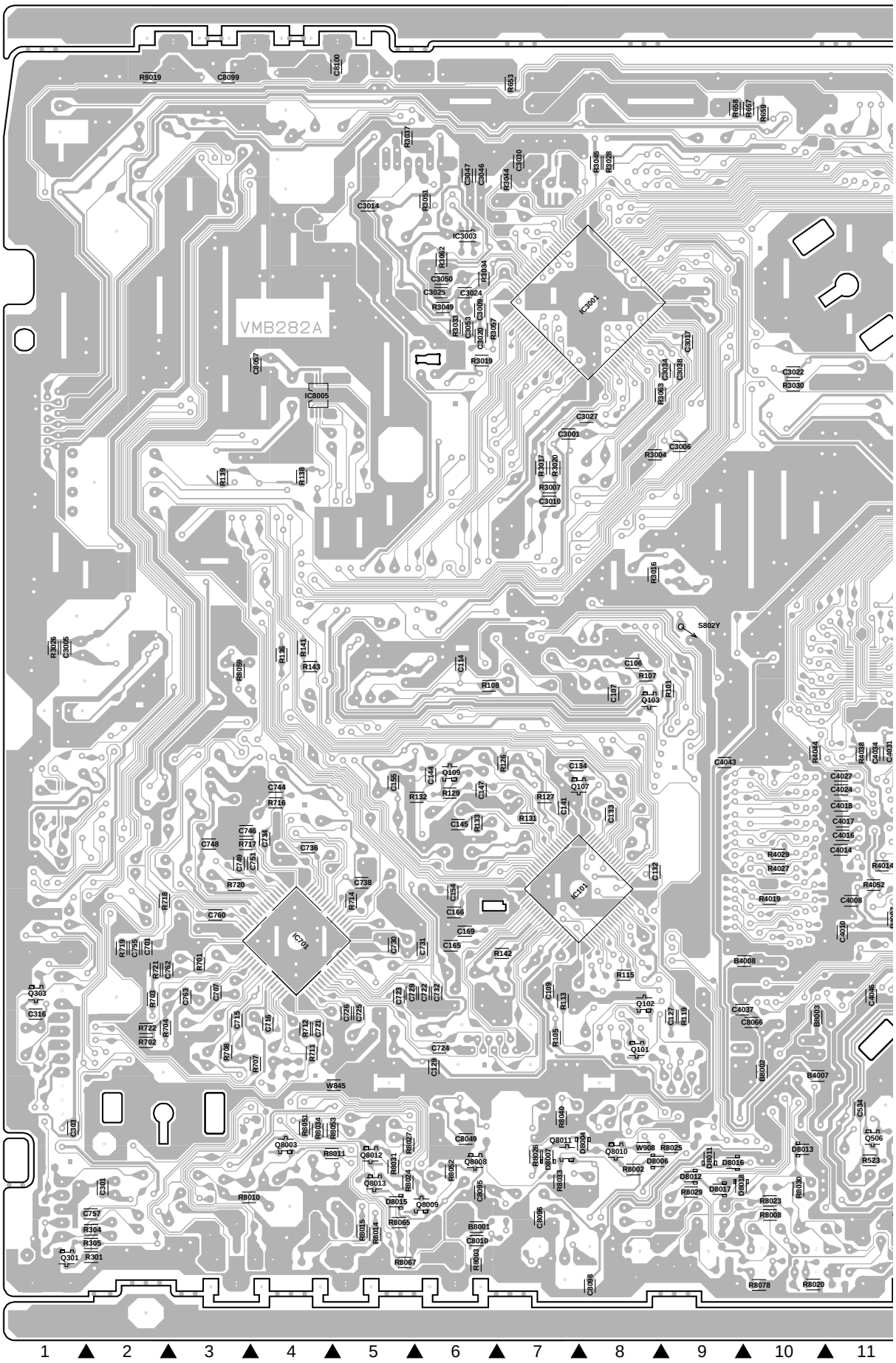
VMB282A
IC3001
IC3003
IC8005
IC101
IC701
S802Y
1
2
3
4
5
6
7
8
9
10
11

CUIT BOARDS
OTTOM SIDE)

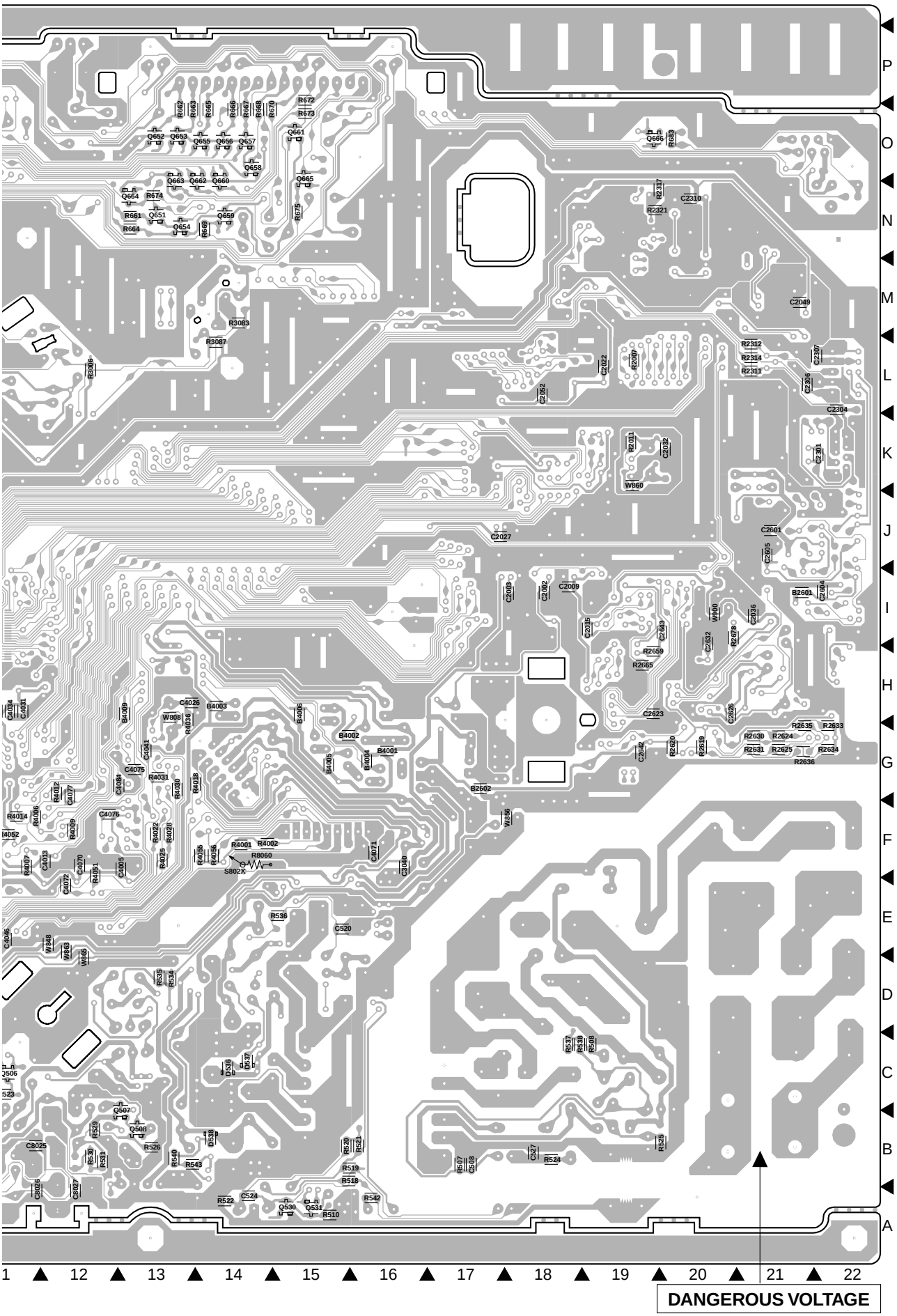

WAVEFORMS

MPEG/MICON

2ns
1.0V

①

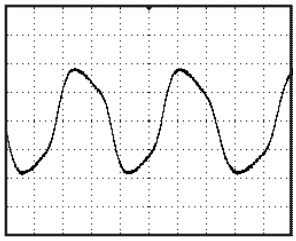

20ns
500mV

②

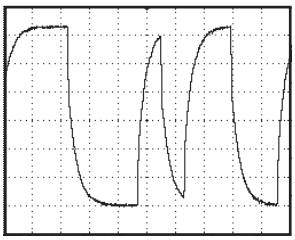

MEMORY

500µs
500mV

③

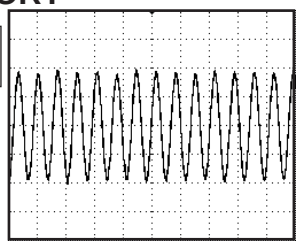

DSP

20ns
1.0V

⑤

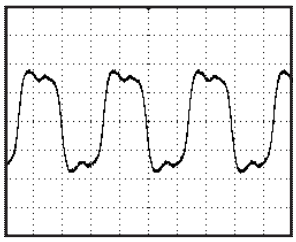

20ns
500mV

⑥

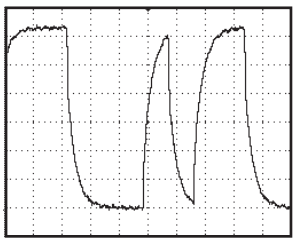

20ns
1.0V

⑦

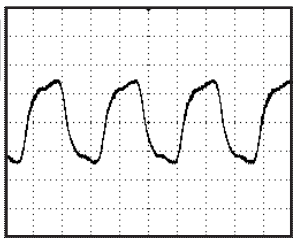

READ CHANNEL

200ns
200mV

⑧

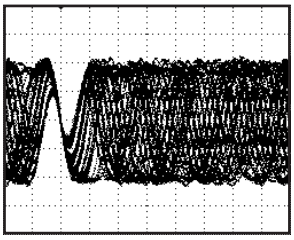

200ns
200mV

⑨

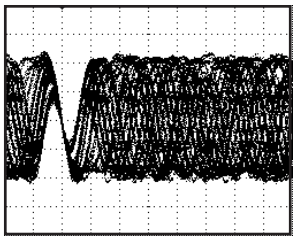

AUDIO/VIDEO

PB
500us
1.0V

⑩

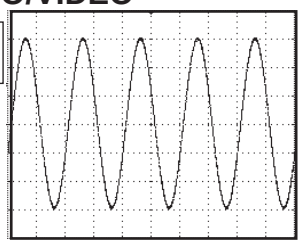

PB
500us
1.0V

⑪

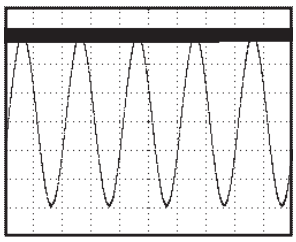

Y/C/AUDIO/CCD/HEAD AMP

PB
10µs
500mV

⑯

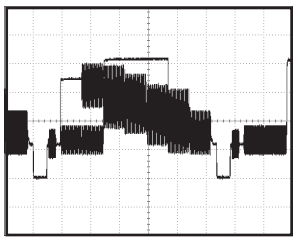

PB
100ns
100mV

⑰

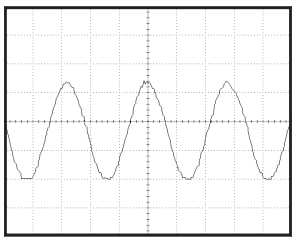

PB
1ms
100mV

⑱

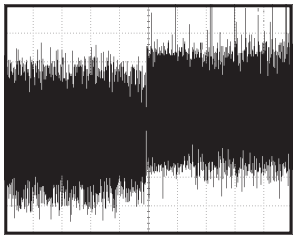

PB
200ms
500mV

⑲

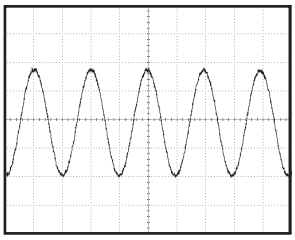

REC
5µs
20V

⑳

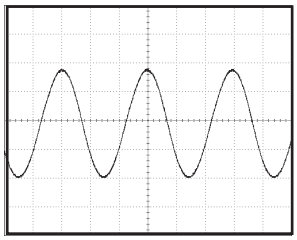

VCR SYSCON

PB
5ms
1.0V

㉑

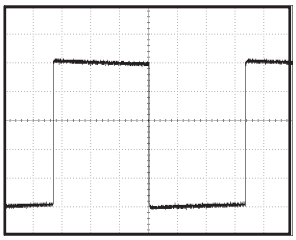

PB
200µs
1.0V

㉒

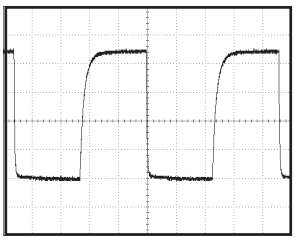

POWER ON
50ns
1.0V

㉓

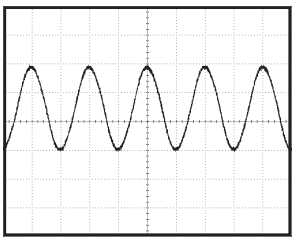

NOTE: The following waveforms were measured at the point of the corresponding balloon number in the schematic diagram.

WAVEFORMS

PB
500µs
1.0V

24

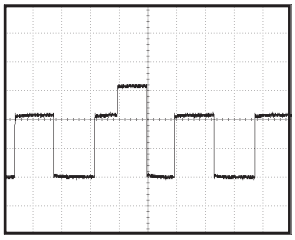

PB
5ms
500mV

25

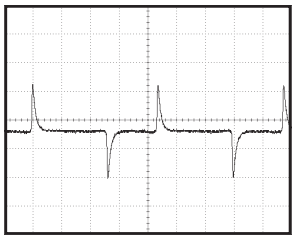

PB
5ms
2.0V

27

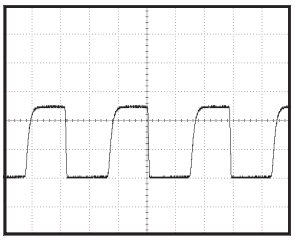

HI-FI/DEMODULATOR

PB
10ms
1.0V

28

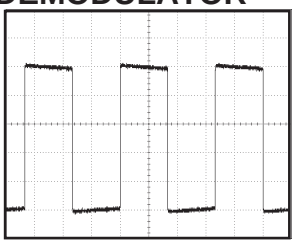

TUNER/JACK

10µs
200mV

29

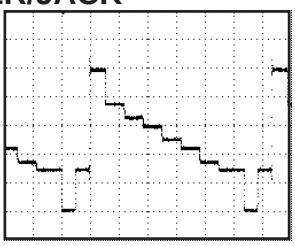

10µs
200mV

30

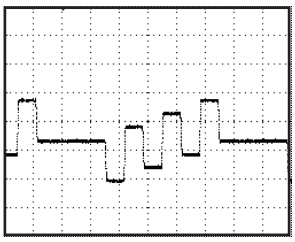

10µs
200mV

31

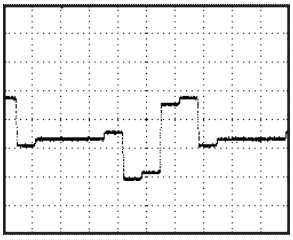

10µs
200mV

32

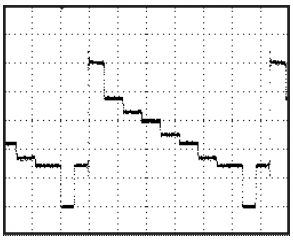

10µs
200mV

33

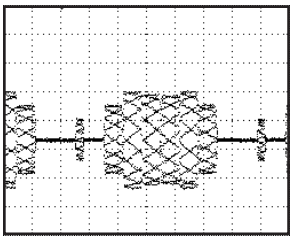

500ns
100mV

34

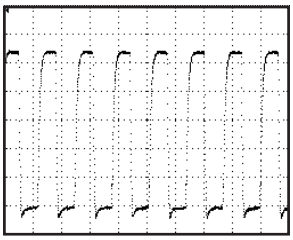

500ns
1.0V

35

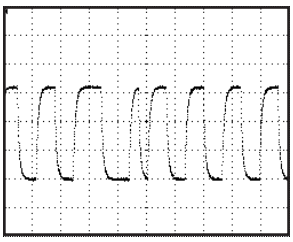

POWER

5µs
500mV

38

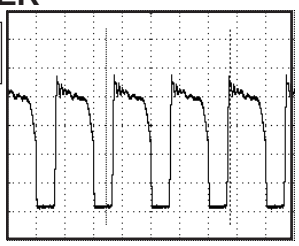

5µs
5.0V

39

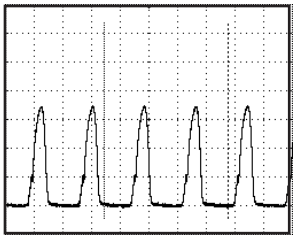

NOTE: The following waveforms were measured at the point of the corresponding balloon number in the schematic diagram.

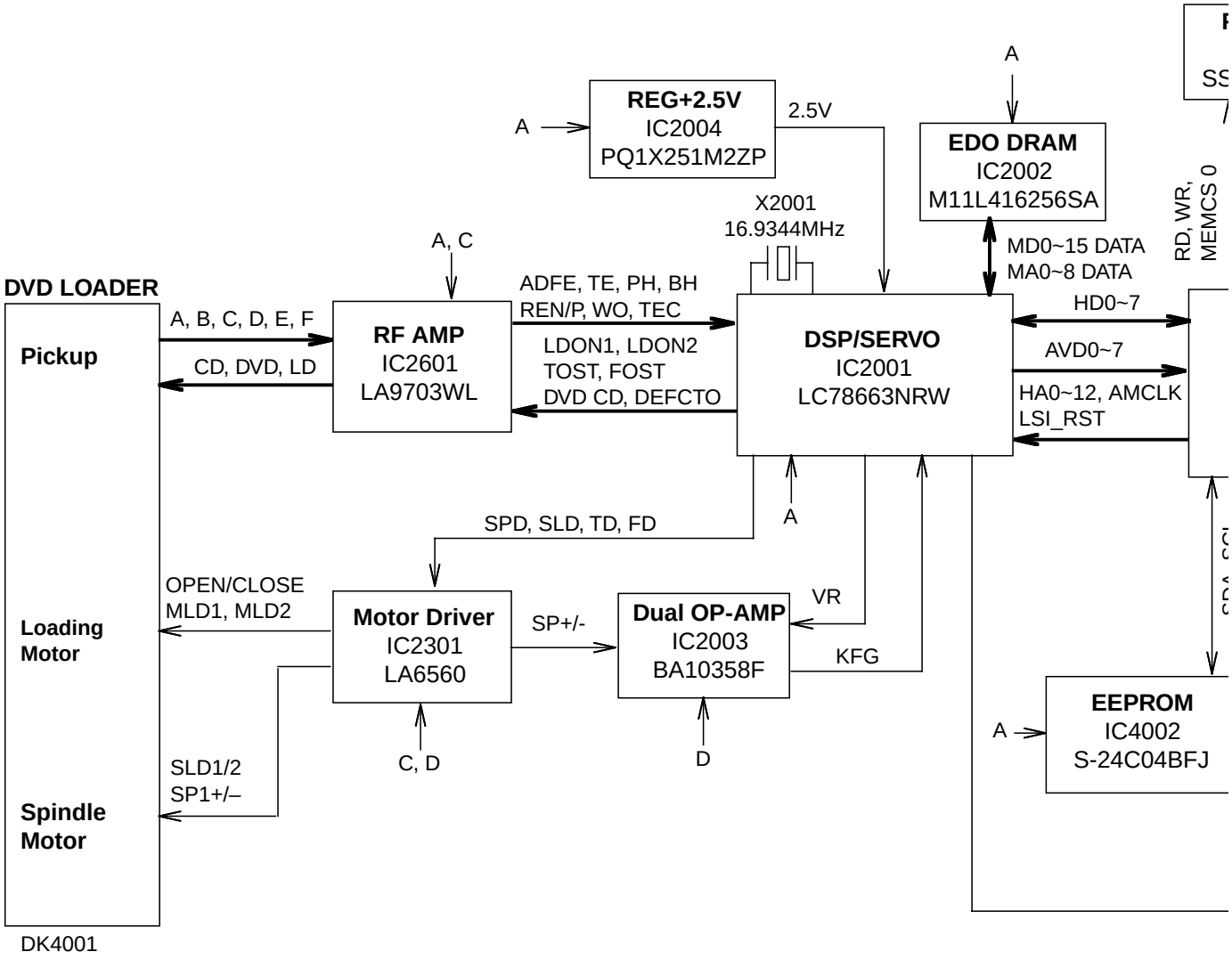
DVD LOADER
Pickup
Loading Motor
Spindle Motor
DK4001
A, B, C, D, E, F
CD, DVD, LD
OPEN/CLOSE
MLD1, MLD2
SLD1/2
SP1+/–
A, C
RF AMP
IC2601
LA9703WL
ADFE, TE, PH, BH
REN/P, WO, TEC
LDON1, LDON2
TOST, FOST
DVD CD, DEFCTO
A
REG+2.5V
IC2004
PQ1X251M2ZP
2.5V
X2001
16.9344MHz
DSP/SERVO
IC2001
LC78663NRW
SPD, SLD, TD, FD
A
Motor Driver
IC2301
LA6560
SP+/-
C, D
Dual OP-AMP
IC2003
BA10358F
VR
KFG
D
A
EDO DRAM
IC2002
M11L416256SA
MD0~15 DATA
MA0~8 DATA
HD0~7
AVD0~7
HA0~12, AMCLK
LSI_RST
RD, WR,
MEMCS 0
A
EEPROM
IC4002
S-24C04BFJ

CK DIAGRAM

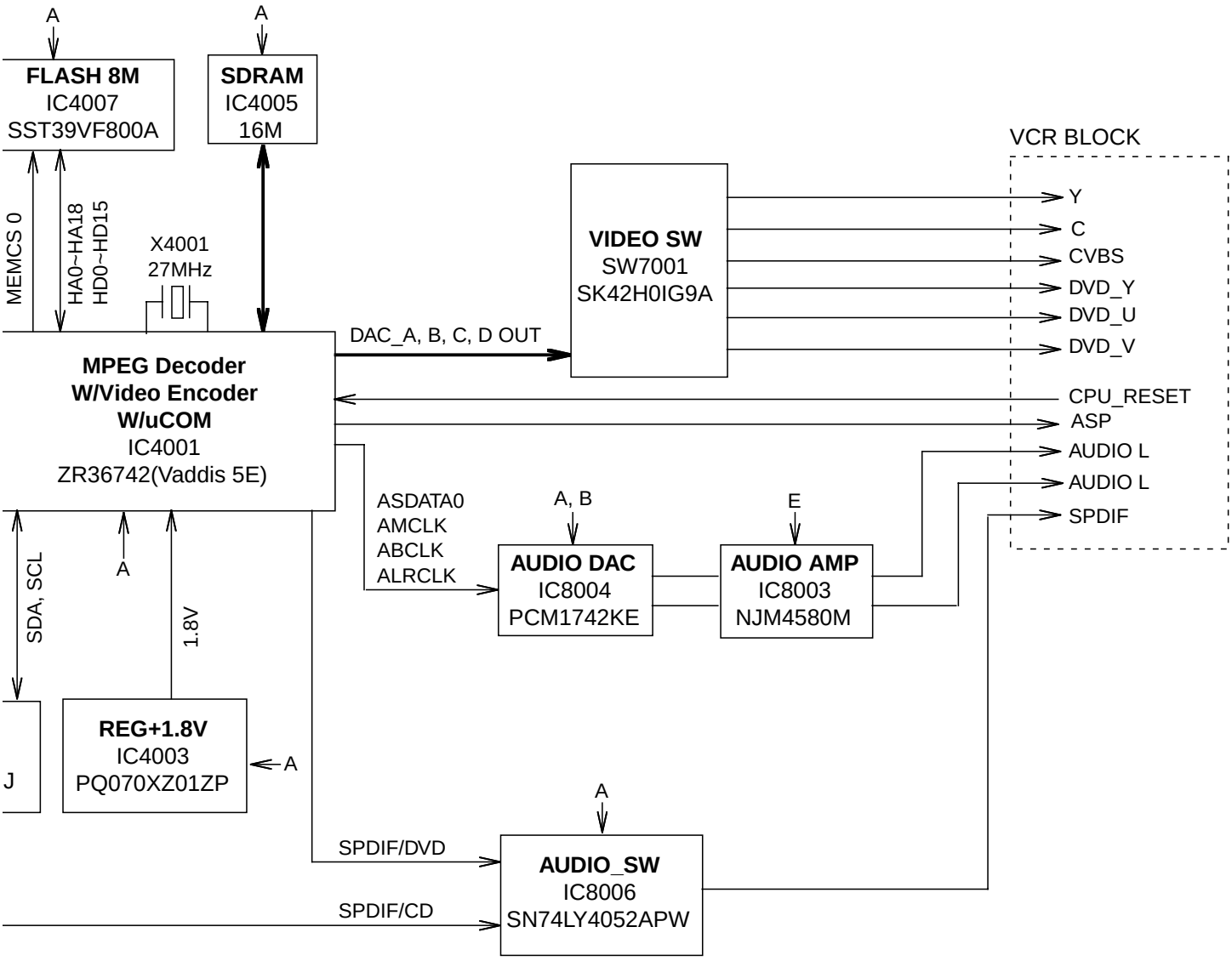

A P.CON+3.3V
B P.CON+5V
C P.CON+A5V
D P.CON+9V
E P.CON+12V

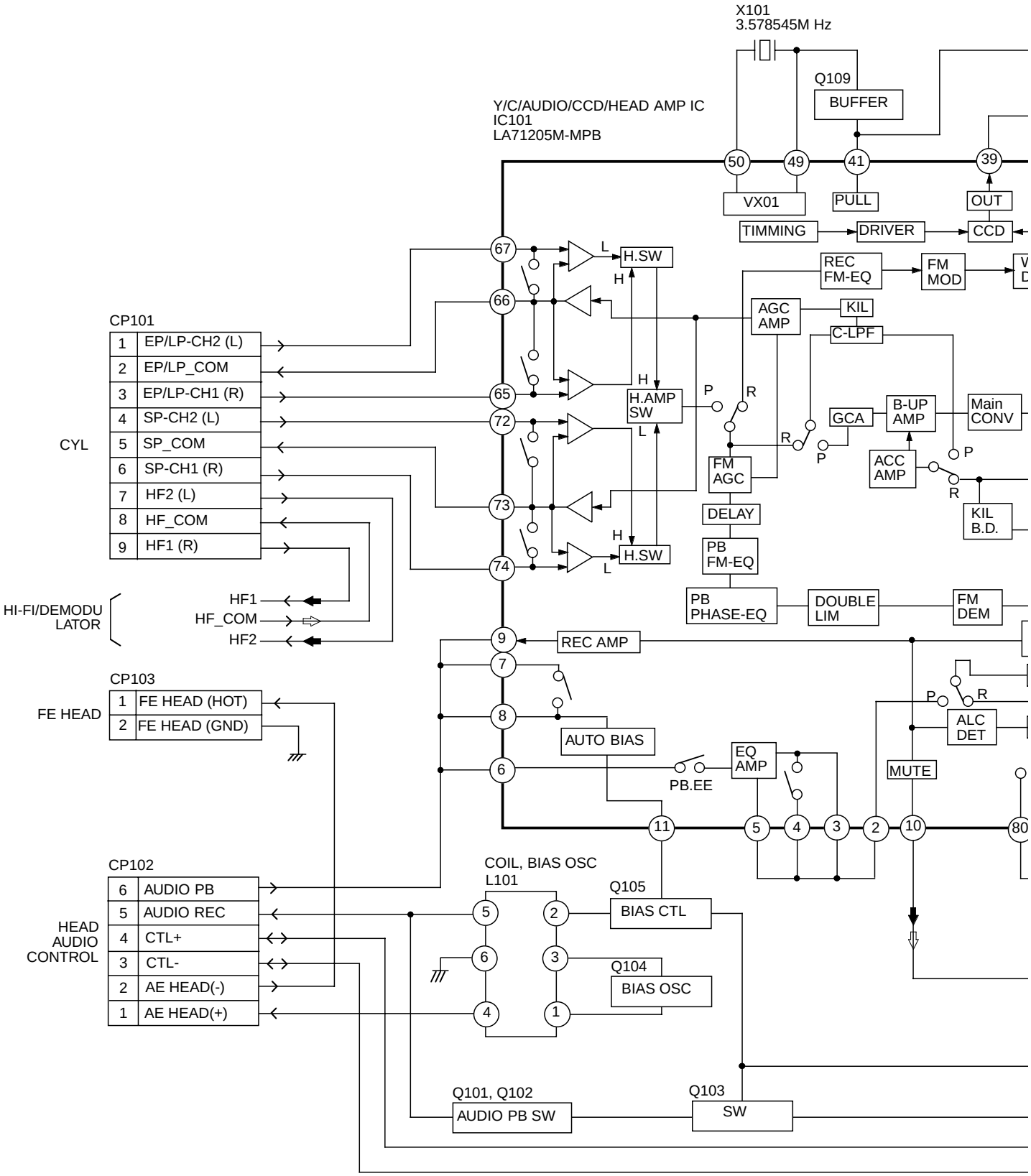
X101
3.578545M Hz
Q109
BUFFER
Y/C/AUDIO/CCD/HEAD AMP IC
IC101
LA71205M-MPB
50
49
41
39
VX01
PULL
OUT
TIMMING
DRIVER
CCD
67
66
65
72
73
74
H.SW
REC
FM-EQ
FM
MOD
AGC
AMP
KIL
C-LPF
H.AMP
SW
GCA
B-UP
AMP
Main
CONV
ACC
AMP
KIL
B.D.
FM
AGC
DELAY
PB
FM-EQ
PB
PHASE-EQ
DOUBLE
LIM
FM
DEM
CP101
1 EP/LP-CH2 (L)
2 EP/LP_COM
3 EP/LP-CH1 (R)
4 SP-CH2 (L)
5 SP_COM
6 SP-CH1 (R)
7 HF2 (L)
8 HF_COM
9 HF1 (R)
CYL
HI-FI/DEMODU
LATOR
HF1
HF_COM
HF2
9
7
8
6
REC AMP
CP103
1 FE HEAD (HOT)
2 FE HEAD (GND)
FE HEAD
AUTO BIAS
PB.EE
EQ
AMP
ALC
DET
MUTE
11
5
4
3
2
10
80
CP102
6 AUDIO PB
5 AUDIO REC
4 CTL+
3 CTL-
2 AE HEAD(-)
1 AE HEAD(+)
HEAD
AUDIO
CONTROL
COIL, BIAS OSC
L101
Q105
BIAS CTL
Q104
BIAS OSC
Q101, Q102
AUDIO PB SW
Q103
SW

AMP BLOCK DIAGRAM

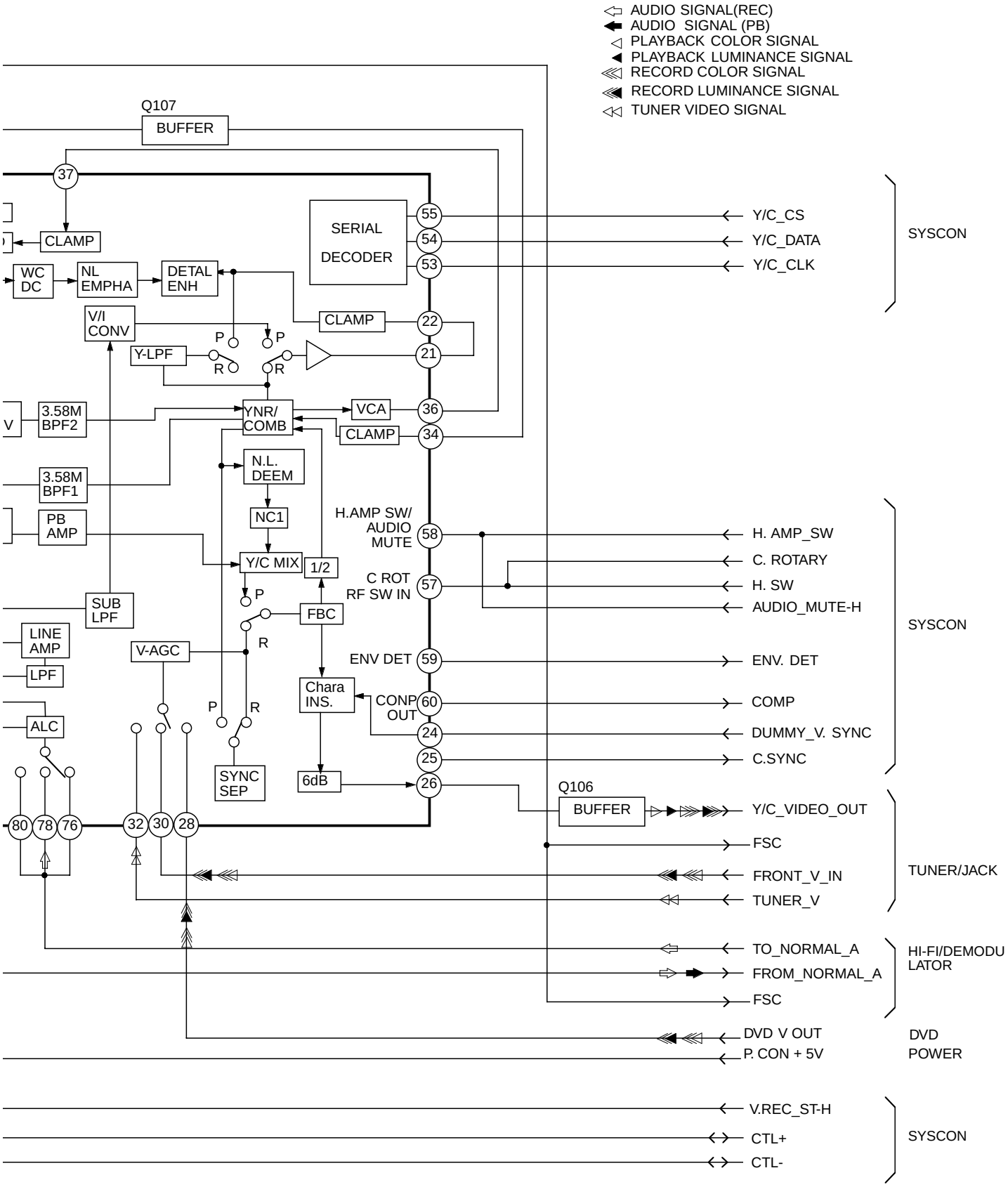

SYSTEM CONTR

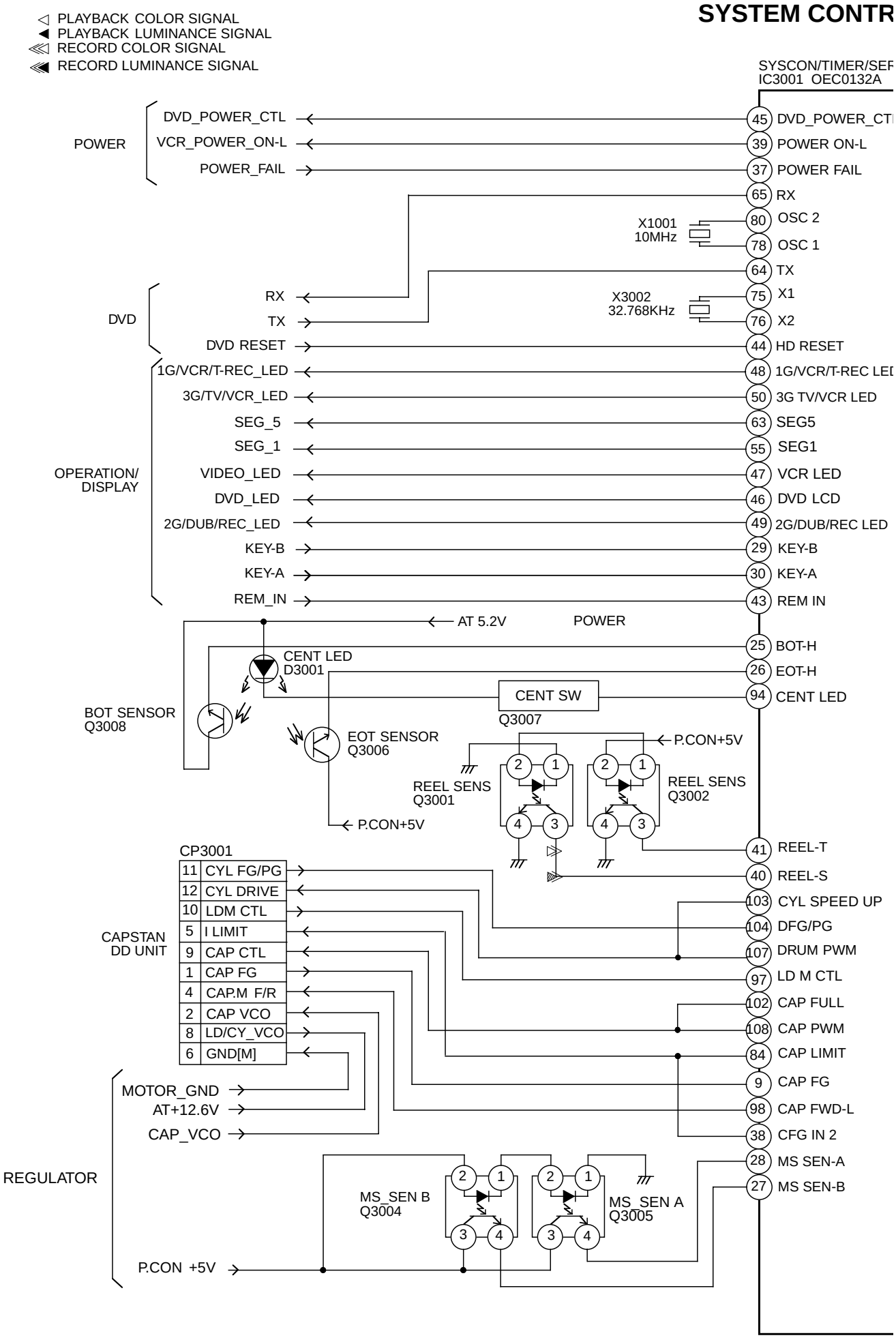

TROL BLOCK DIAGRAM

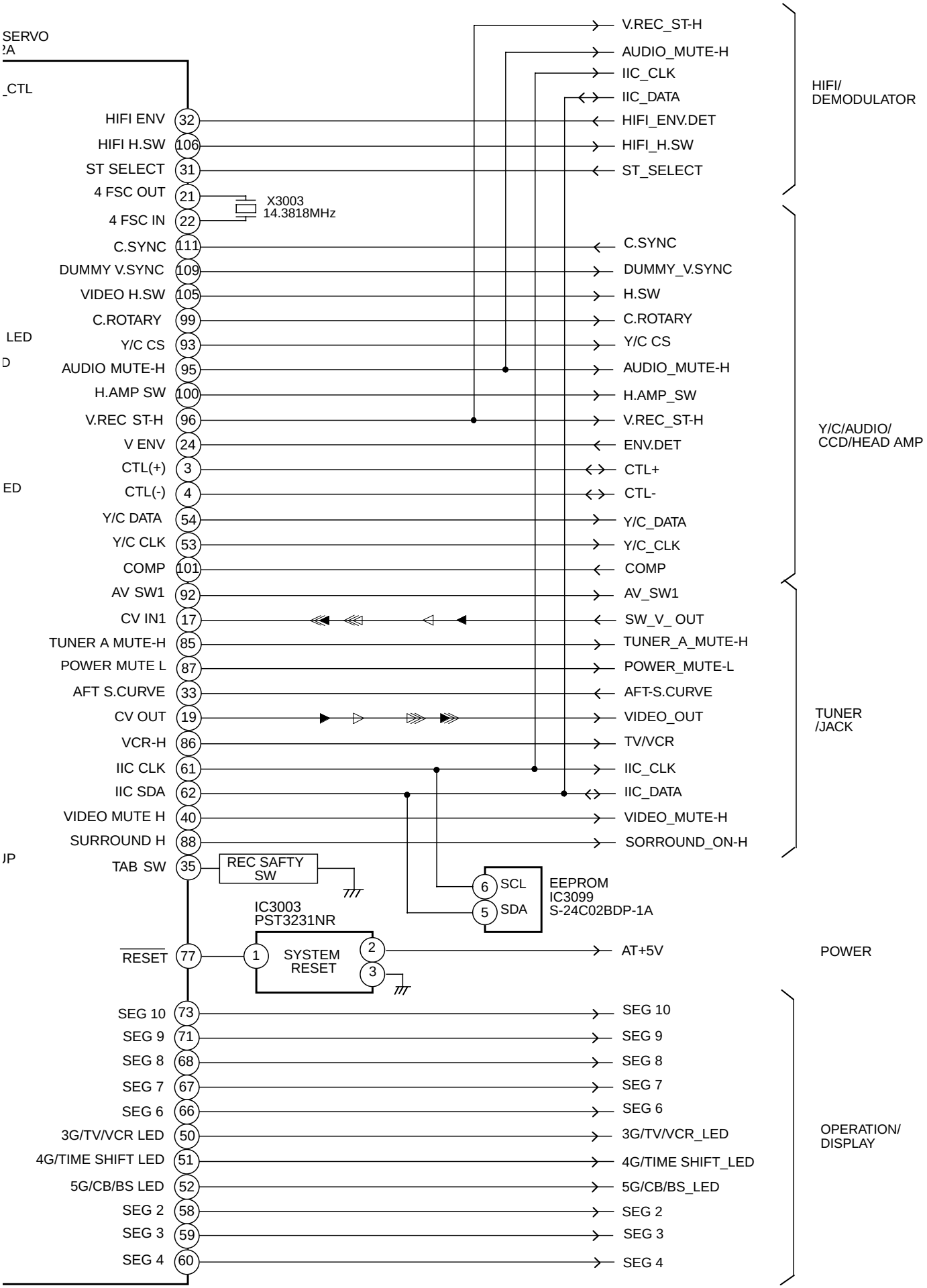

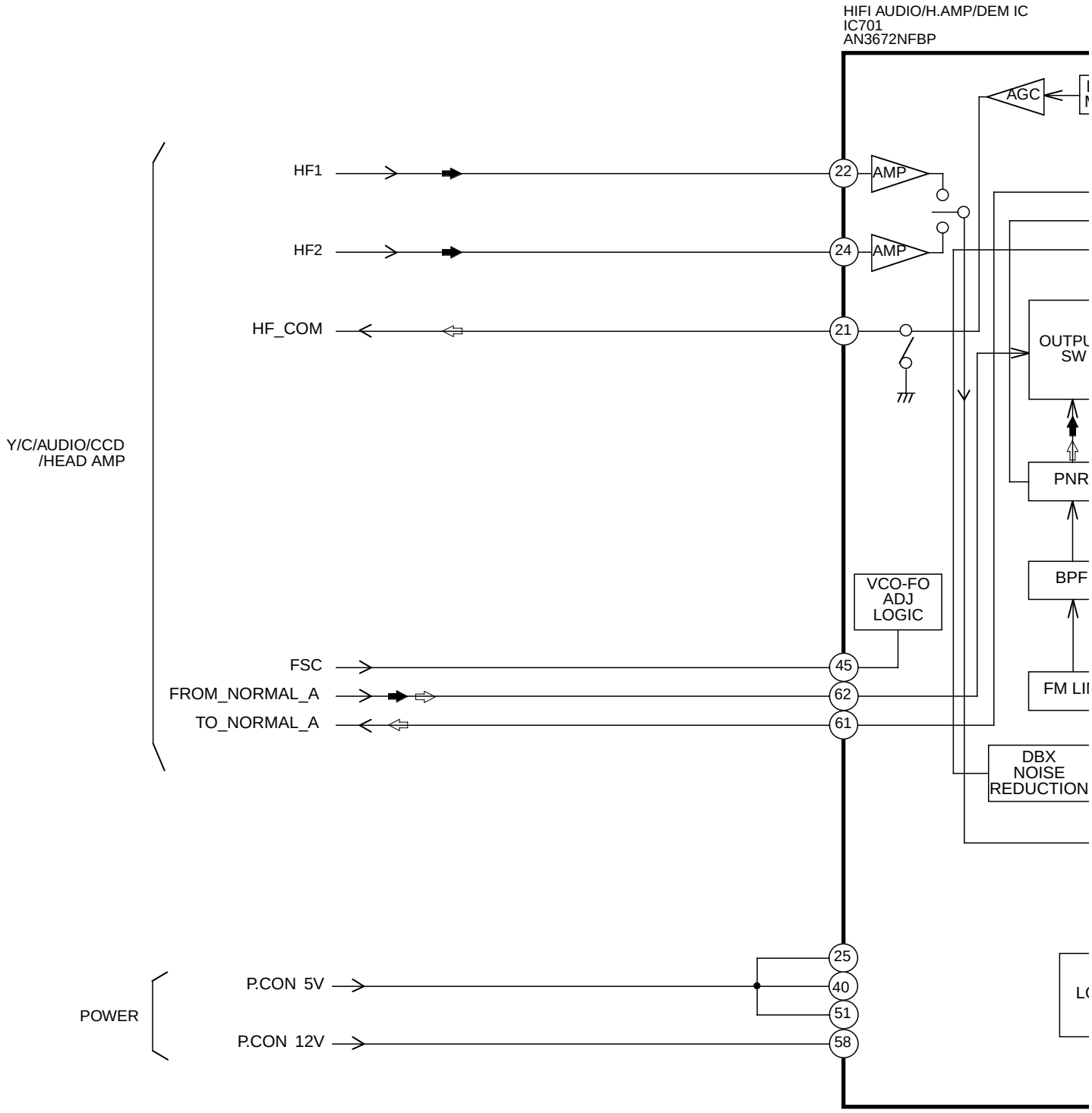
HIFI AUDIO/H.AMP/DEM IC
IC701
AN3672NFBP
AGC
HF1
22
AMP
HF2
24
AMP
HF_COM
21
OUTPU
SW
Y/C/AUDIO/CCD
/HEAD AMP
PNR
BPF
VCO-FO
ADJ
LOGIC
FSC
45
FROM_NORMAL_A
62
FM LI
TO_NORMAL_A
61
DBX
NOISE
REDUCTION
25
P.CON 5V
40
LO
POWER
51
P.CON 12V
58

ATOR BLOCK DIAGRAM

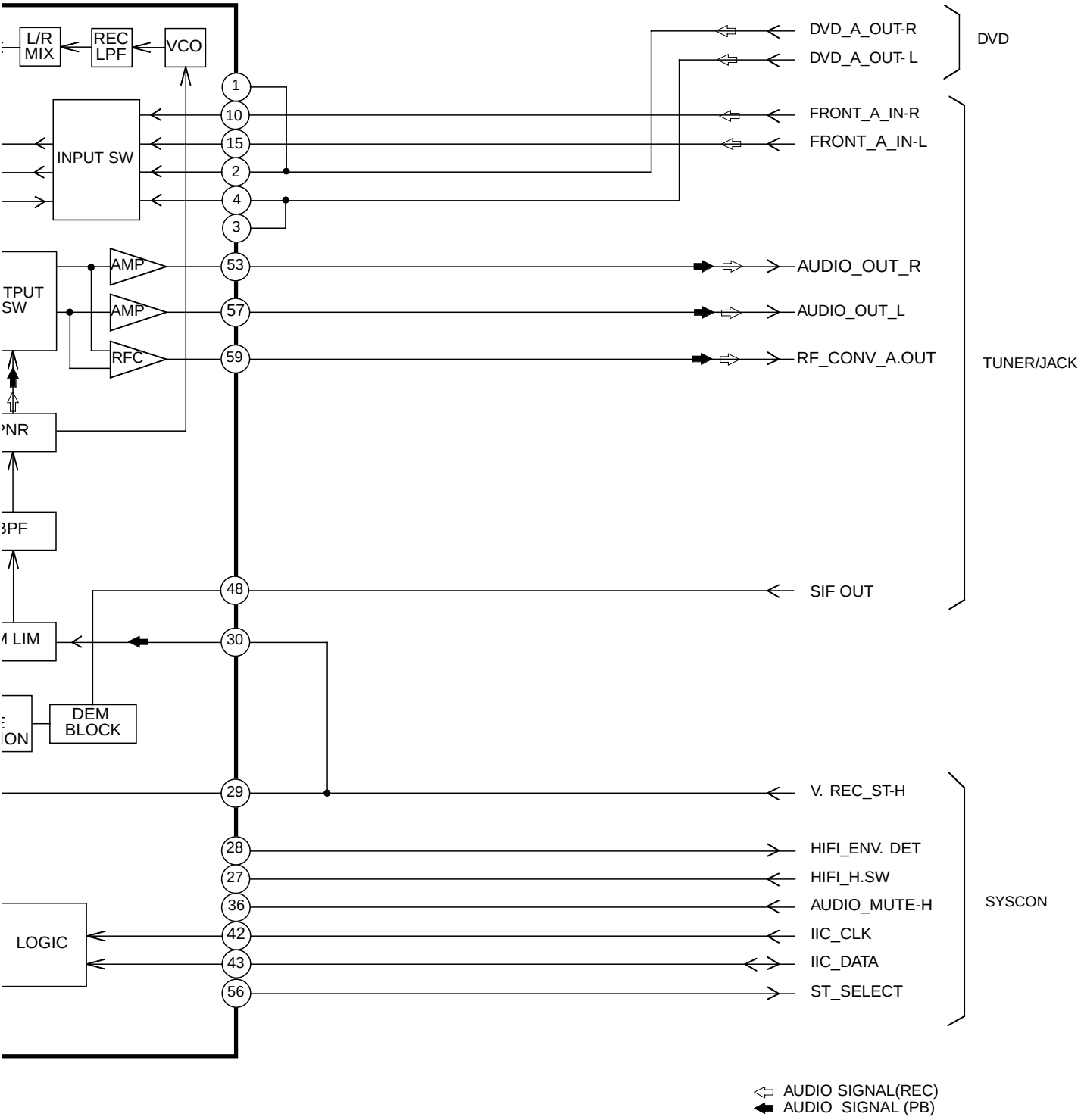

TUNER/JACK

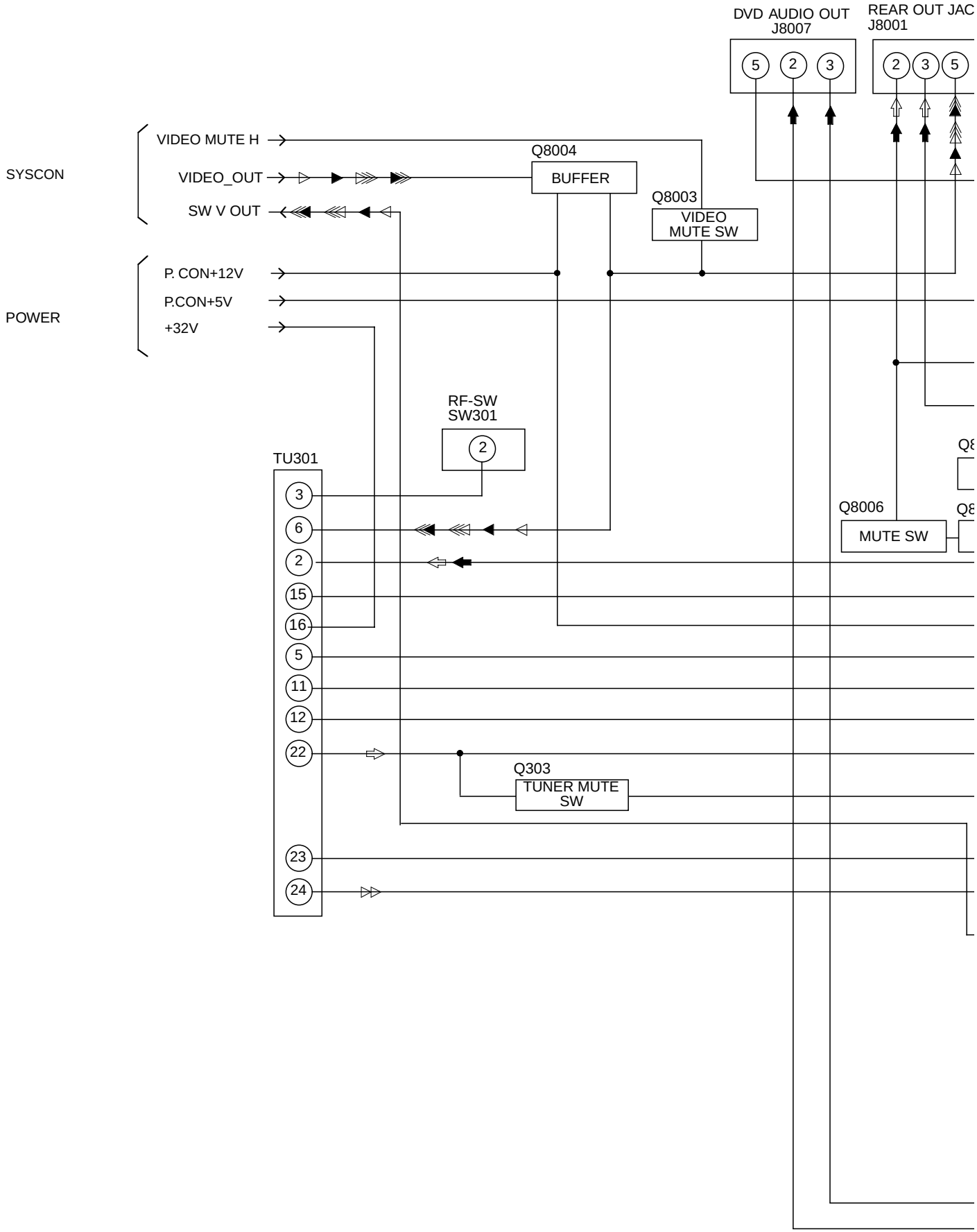
DVD AUDIO OUT
J8007
REAR OUT JAC
J8001
5
2
3
2
3
5
SYSCON
VIDEO MUTE H
VIDEO_OUT
SW V OUT
Q8004
BUFFER
Q8003
VIDEO
MUTE SW
POWER
P. CON+12V
P.CON+5V
+32V
RF-SW
SW301
2
TU301
3
6
2
15
16
5
11
12
22
23
24
Q8006
MUTE SW
Q303
TUNER MUTE
SW

K BLOCK DIAGRAM

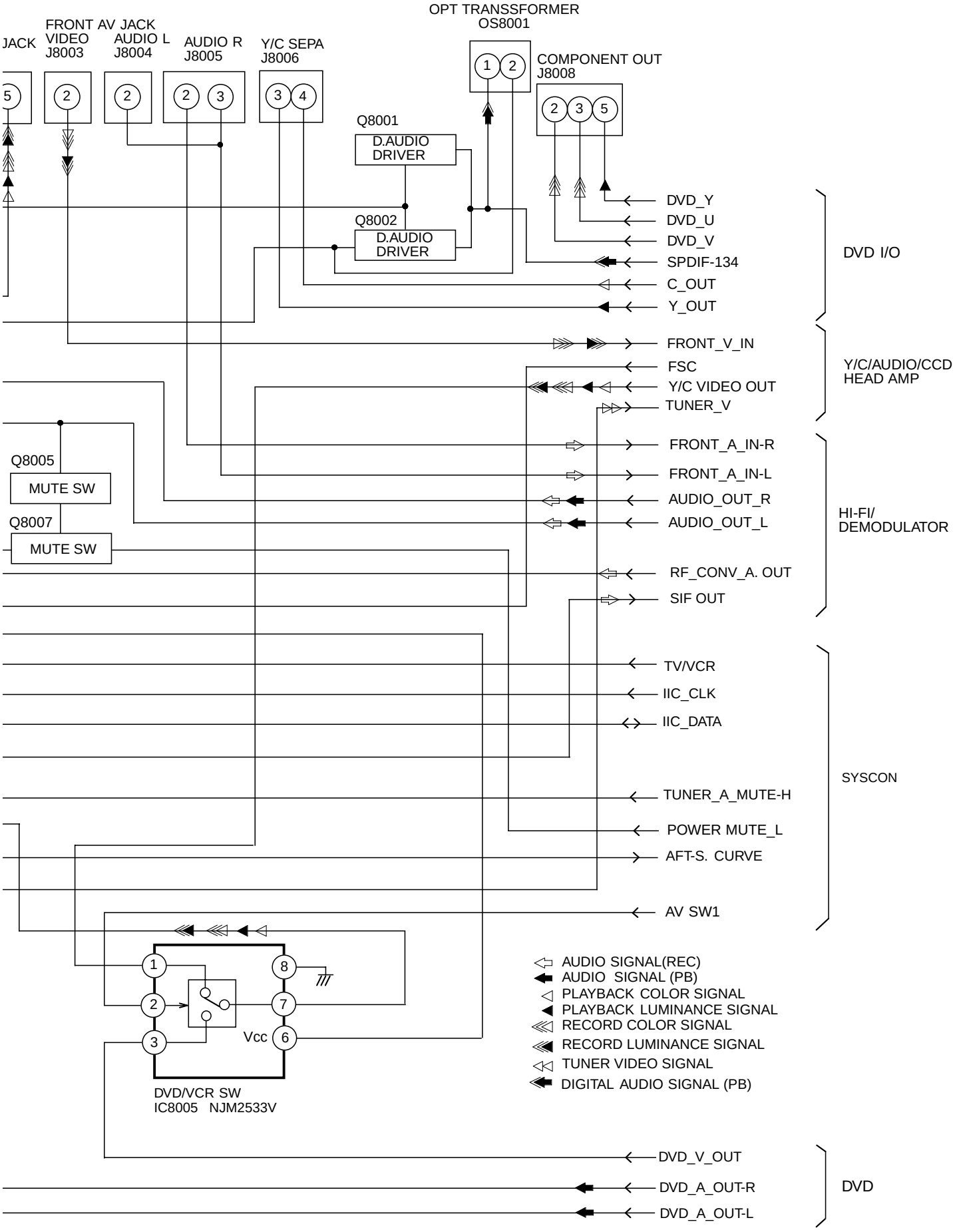

POWER BLOCK

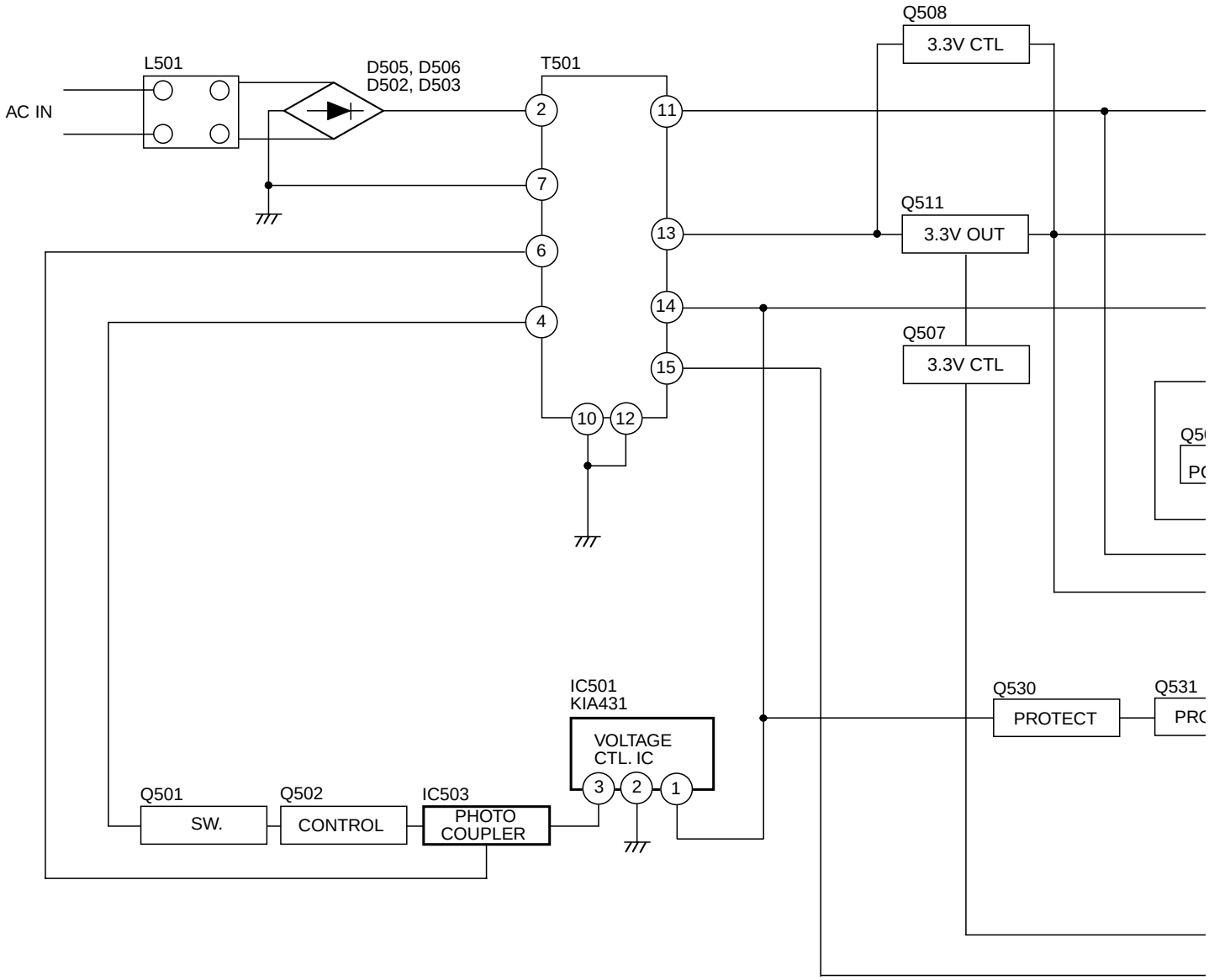
AC IN
L501
D505, D506
D502, D503
T501
2
7
6
4
11
13
14
15
10
12
Q508
3.3V CTL
Q511
3.3V OUT
Q507
3.3V CTL
IC501
KIA431
VOLTAGE
CTL. IC
3
2
1
Q530
PROTECT
Q531
Q501
SW.
Q502
CONTROL
IC503
PHOTO
COUPLER

CK DIAGRAM

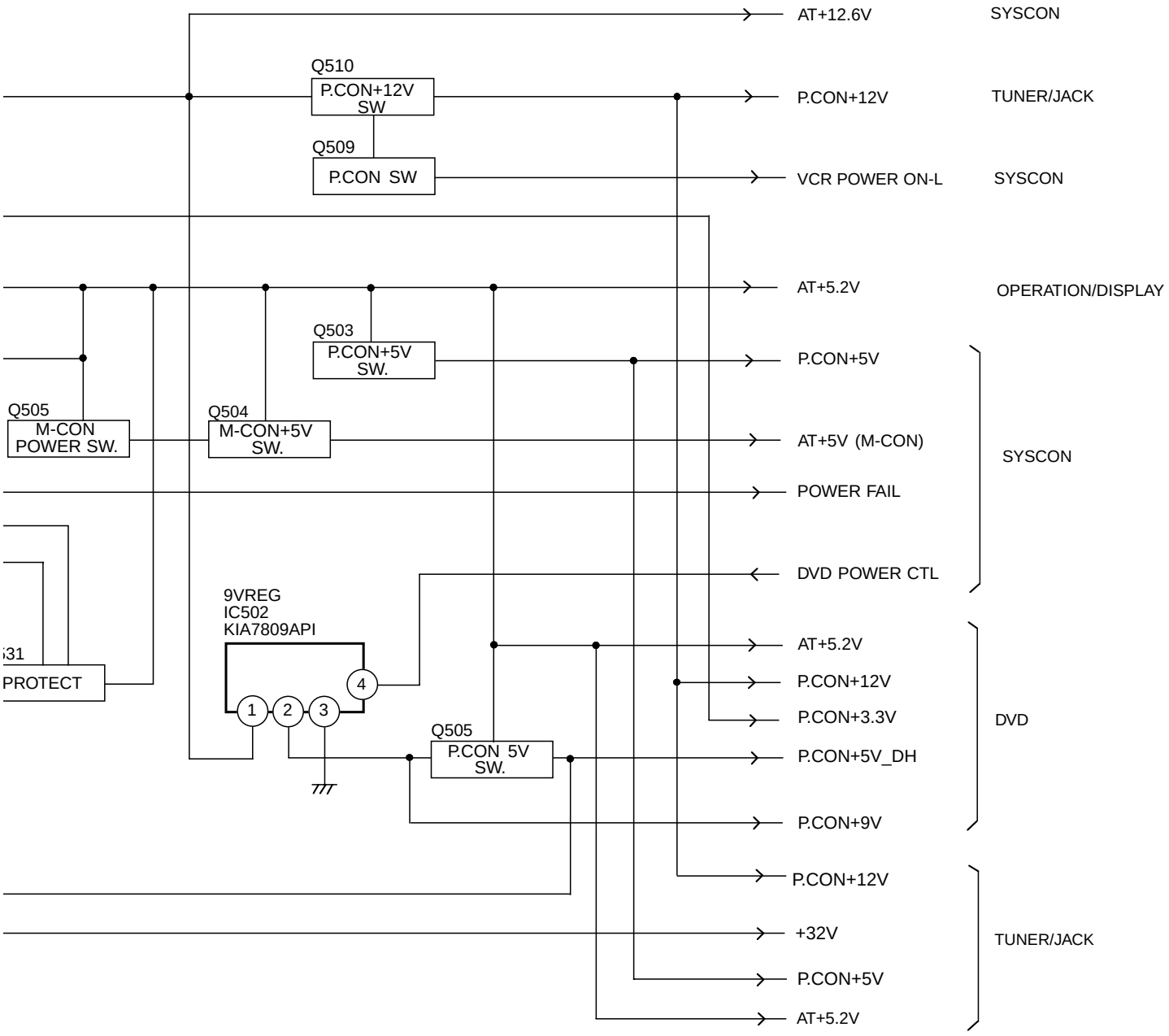
AT+12.6V
SYSCON
Q510
P.CON+12V SW
P.CON+12V
TUNER/JACK
Q509
P.CON SW
VCR POWER ON-L
SYSCON
AT+5.2V
OPERATION/DISPLAY
Q503
P.CON+5V SW.
P.CON+5V
Q505
M-CON POWER SW.
Q504
M-CON+5V SW.
AT+5V (M-CON)
SYSCON
POWER FAIL
DVD POWER CTL
9VREG
IC502
KIA7809API
PROTECT
AT+5.2V
P.CON+12V
P.CON+3.3V
DVD
Q505
P.CON 5V SW.
P.CON+5V_DH
P.CON+9V
P.CON+12V
+32V
TUNER/JACK
P.CON+5V
AT+5.2V

JVC SERVICE & ENGINEERING COMPANY OF AMERICA
DIVISION OF JVC AMERICAS CORP.

www.jvcservice.com(US Only)

JVC CANADA INC.

Head office : 21 Finchdene Square Scarborough, Ontario M1X 1A7 (416)293-1311

JVC®

Printed in Japan
0212 VP

PARTS LIST

SAFETY PRECAUTION

Parts identified by the ⚠ symbol are critical for safety. Replace only with specified part numbers.

3.1 PACKING AND ACCESSORY ASSEMBLY <M1>

The instruction manual to be provided with this product will differ according to the destination.

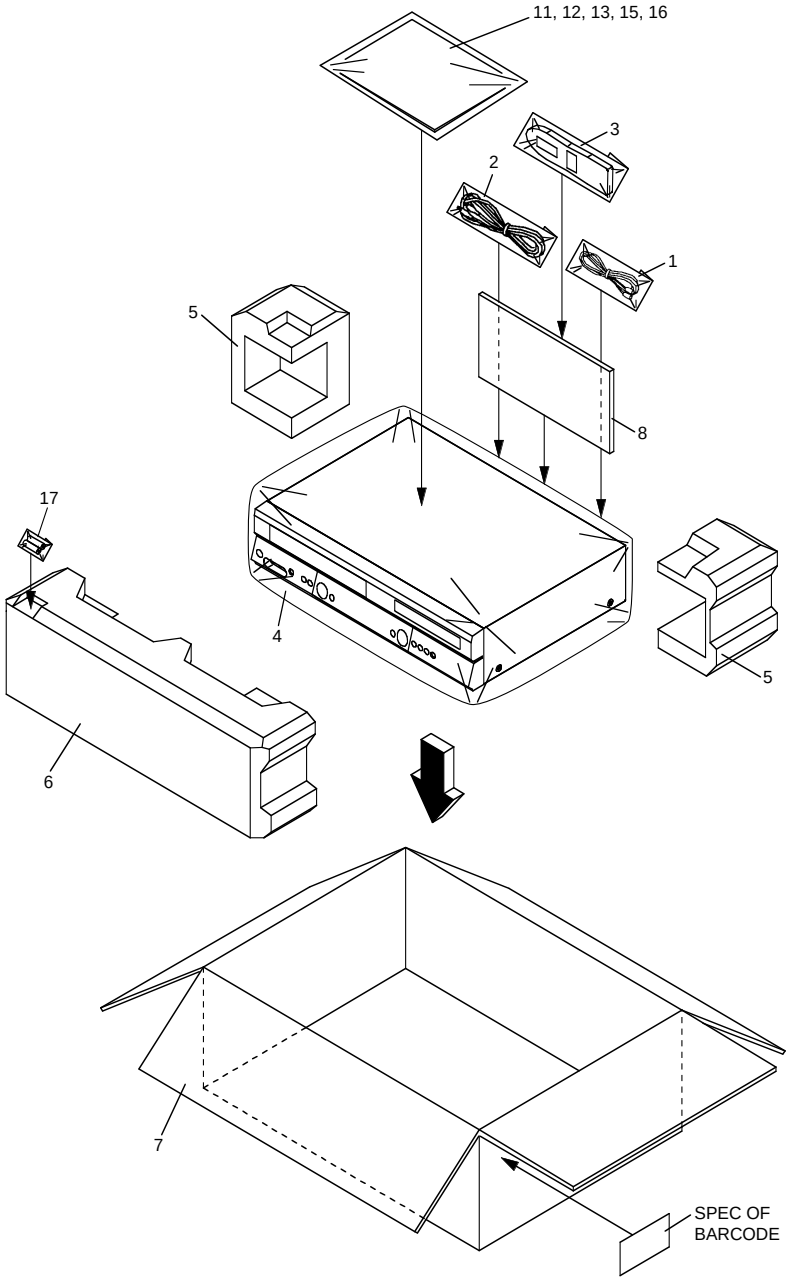

#	⚠	REF No.	PART No.	PART NAME, DESCRIPTION	

****

PACKING AND ACCESSORY ASSEMBLY <M1>

#	⚠	REF No.	PART No.	PART NAME, DESCRIPTION	
		1	PEAC0294-03	RF CABLE	
		2	QAM0174-001	CORD,RCA PIN	
		3	X-076D0GA020	TRANSMITTER,XVC20US LP21036-027A	
			X-076D0GA010	TRANSMITTER,XVC21UC LP21036-023A	
		4	X-791WHA0100	GIFT SHEET	
		5	X-792WHA0418	PACKAGE,BACK	
		6	X-792WHA0419	PACKAGE,FRONT	
		7	X-793WCD1454	GIFT BOX,XVC20US	
			X-793WCD1466	GIFT BOX.XVC21UC	
		8	X-795WCA0662	PAD,DVD/VR	155x250
		11	X-JB5UD200	POLYBAG,INSTRUCTION(RED CAUTION)	
	⚠	12	X-J2C30101A	INSTRUCTION BOOK(EN),XVC20US	
	⚠		X-J2C30201A	INSTRUCTION BOOK(EN),XVC21UC	
	⚠		X-J2C30210A	INSTRUCTION BOOK(FR),XVC21UC	
		13	X-J2B00317	REGISTRATION CARD,XVC20US	
		15	X-J2B00402	GUARANTEE CARD,XVC21UC	
		16	X-J2B00415	SERVICE STATION LIST,XVC21UC	
		17	———	BATTERY,MANGAN	R6P(AR)XICI

3.2 FINAL ASSEMBLY <M2>

BEWARE OF BOGUS PARTS

Parts that do not meet specifications may cause trouble in regard to safety and performance. We recommend that genuine JVC parts be used.

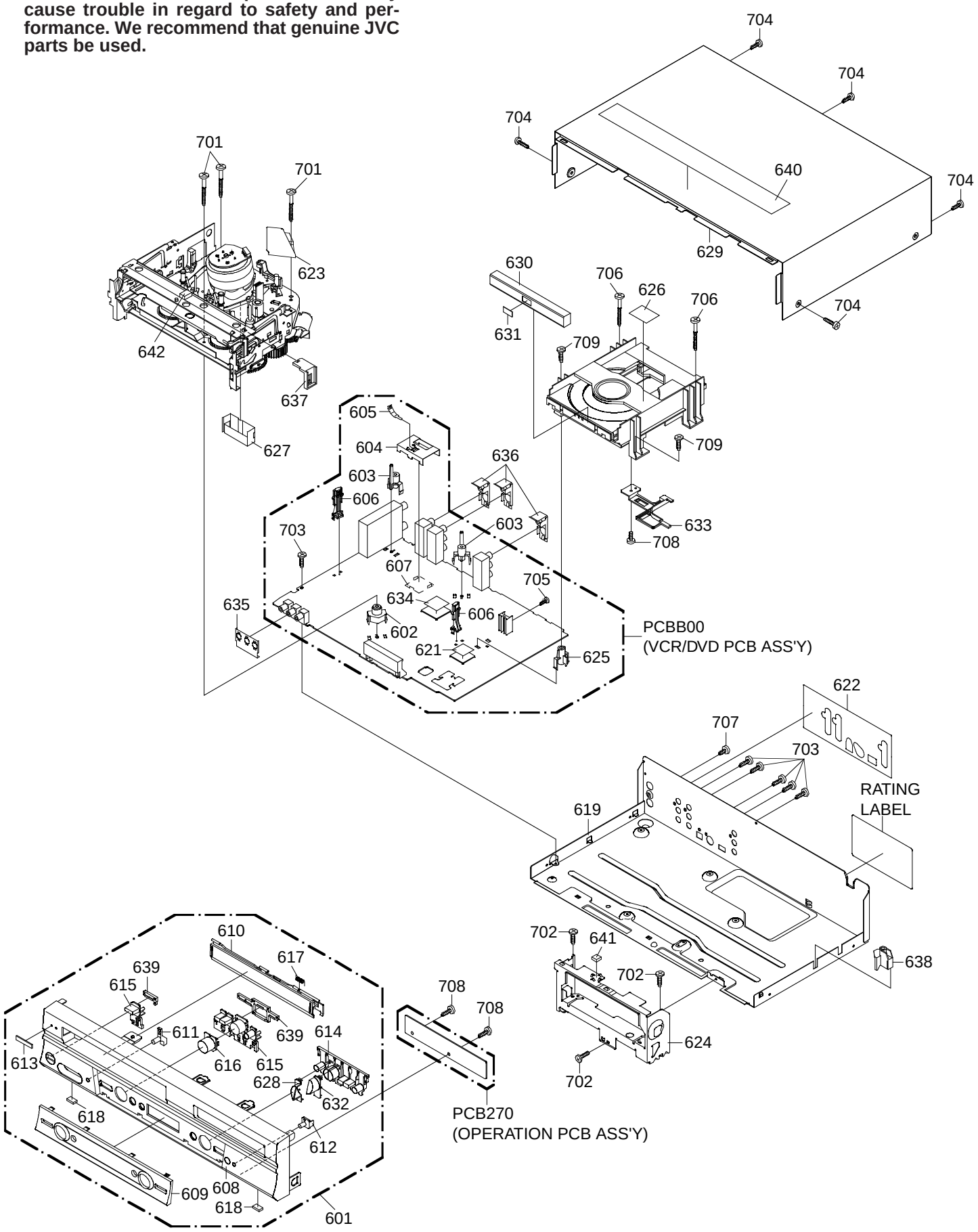

#	⚠	REF No.	PART No.	PART NAME, DESCRIPTION	

****

FINAL ASSEMBLY <M2>

	⚠	601	X-A2C301T720	CABINET,FRONT ASSY,XVC20US	
	⚠		X-A2C302T720	CABINET,FRONT ASSY,XVC21UC	
		602	X-701WPA0686	HOLDER,DECK	
		603	X-701WPA0751	HOLDER,DECK	
		604	X-752WSA0230	SHIELD,CASE HEAD AMP	
		605	X-753WUAA006	SPRING,EARTH HEAD AMP	
		606	X-85OP700038	HOLDER,END SENSOR	
		607	X-752WSA0308	SHIELD,COVER HEAD AMP	
	⚠	608	X-701WPJ1189	CABINET,FRONT,XVC20US	
	⚠		X-701WPJ1190	CABINET,FRONT,XVC21UC	
		609	X-711WPD0635	PLATE,DISPLAY	
		610	X-712WPJ0805	FLAP,XVC21US	
			X-712WPJ0802	FLAP,XVC21UC	
		611	X-713WPA0268	GLASS,LED-VCR	
		612	X-713WPA0269	GLASS,LED-DVD	
		613	X-7235380012	BADGE,BRAND,XVC20US	
			X-7235380009	BADGE,BRAND,XVC21UC	
		614	X-735WPJ0232	BUTTON,FRAME-DVD,XVC20US	
			X-735WPJ0231	BUTTON,FRAME-DVD,XVC21UC	
		615	X-735WPJ0233	BUTTON,FRAME-VCR	
		616	X-735WPD0760	BUTTON,VCR/DVD,XVC20US	
			X-735WPD0765	BUTTON,VCR/DVD,XVC21UC	
		617	X-743WKA0042	SPRING,FLAP	
		618	X-800WFA0051	CUSHION,LEG	
	⚠	619	X-702WSA0167	PLATE,BOTTOM	
		621	X-7230007623	SHEET,IC	
		622	X-7230007583	SHEET,JACK	
		623	X-752WSA0275	COVER,AC HEAD	
		624	X-761WSA0101	ANGLE,FRONT	
		625	X-761WPA0260	HOLDER,DVD BL	
		626	X-7260000342	SHEET,CAUTION	
		627	X-752WSA0327	SHIELD,COVER FPC	
		628	X-735WPD0761	BUTTON,STOP,XVC20US	
			X-735WPD0763	BUTTON,STOP,XVC21UC	
	⚠	629	X-702WSB0083	CABINET,TOP,XVC20US	
	⚠		X-702WSB0081	CABINET,TOP,XVC21UC	
		630	X-712WPJ0808	PLATE,TRAY-FRONT,XVC20US	
			X-712WPJ0807	PLATE,TRAY-FRONT,XVC21UC	
		631	X-7235630001	SHEET,DVD(NEW)	
		632	X-735WPD0762	BUTTON,PLAY,XVC20US	
			X-735WPD0764	BUTTON,PLAY,XVC21UC	
		633	X-761WPA0250	HOLDER,FFC	
		634	X-7230007556	SHEET,IC	
		635	X-752WUA0001	SHIELD,3-PIN	
		636	X-752WSA0290	SHIELD,COMPO	
		637	X-761WPA0262	HOLDER,DECK TOP	
		638	X-761WPA0261	HOLDER,DVD BR	
		639	X-738WPA0070	STOPPER,BUTTON,XVC20US	
			X-738WPA0069	STOPPER,BUTTON,XVC21UC	
		640	X-7230007628	POP LABEL	
		641	X-8965TS1010	CUSHION	65TS 10-10H L=10
		642	X-8965TS1017	CUSHION	65TS 10-10H

#	⚠	REF No.	PART No.	PART NAME, DESCRIPTION	
		701	X-8109130B94	SCREW,TAP TITE(B) R PAN	3x29
		702	X-8109230704	SCREW,TAP TITE(B) R BIND	3x7
		703	X-8109230804	SCREW,TAP TITE(B) BIND	3x8
		704	X-8109K30602	SCREW,TAP TITE(B) BIND(3D),XVC20US	3x6
			X-8109K30601	SCREW,TAP TITE(B) BIND(3D),XVC21UC	3x6
		705	X-8109I30A04	SCREW,TAP TITE(B) WH7	3x10
		706	X-8154D30334	SCREW,TAP TITE(B) WH8	3x33R
		707	X-8107130404	SCREW,TAP TITE(S) PAN	3x4
		708	X-8110226804	SCREW,TAP TITE(P) BIND	2.6x8
		709	X-8102230804	SCREW,BIND	M3x8
		CD102	X-122H061504	CORD,VCR/DVD CP102 - A/C HEAD	
		CD2301	X-122H081301	CORD,VCR/DVD CP2301 - DVD DRIVE	
		CD2302	X-06CU251403	CORD,VCR/DVD CP2302 - DVD DRIVE	
		CD2601	X-122H0O2303	CORD,VCR/DVD CP2601 - DVD DRIVE	
	⚠	DK4001	X-169G00020A	DECK CD	DVD-KDR777SL

3.3 MECHANISM ASSEMBLY <M4>

[TOP VIEW]

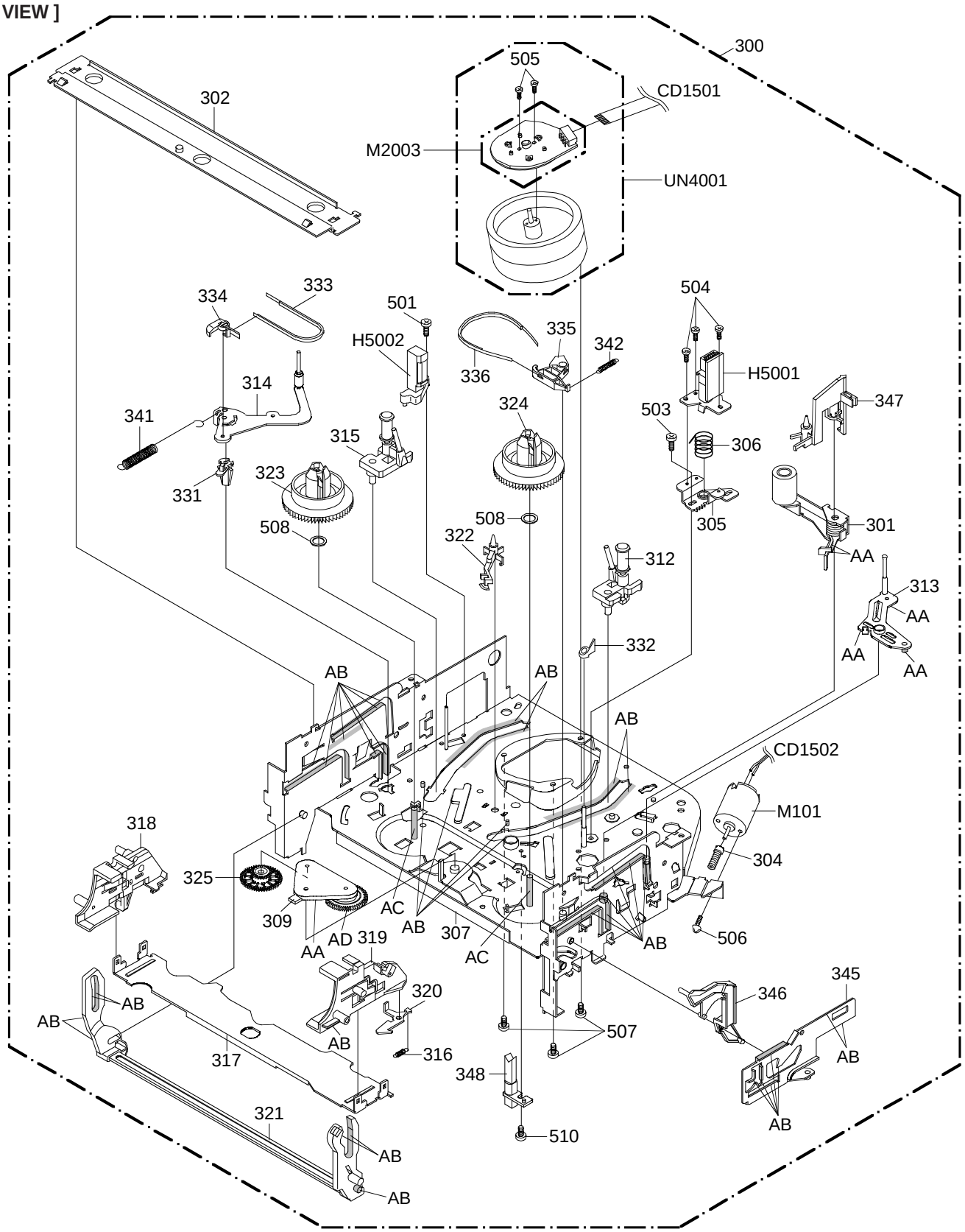

CLASS	PART NO.	MARK
GREASE	G-555G	AA
	MG-33	AB
	FG-84M	AC
	FL-721	AD

NOTE: Applying positions AA, AB, AC and AD for the grease are displayed for this section.
Check if the correct grease is applied for each position.

[BOTTOM VIEW]

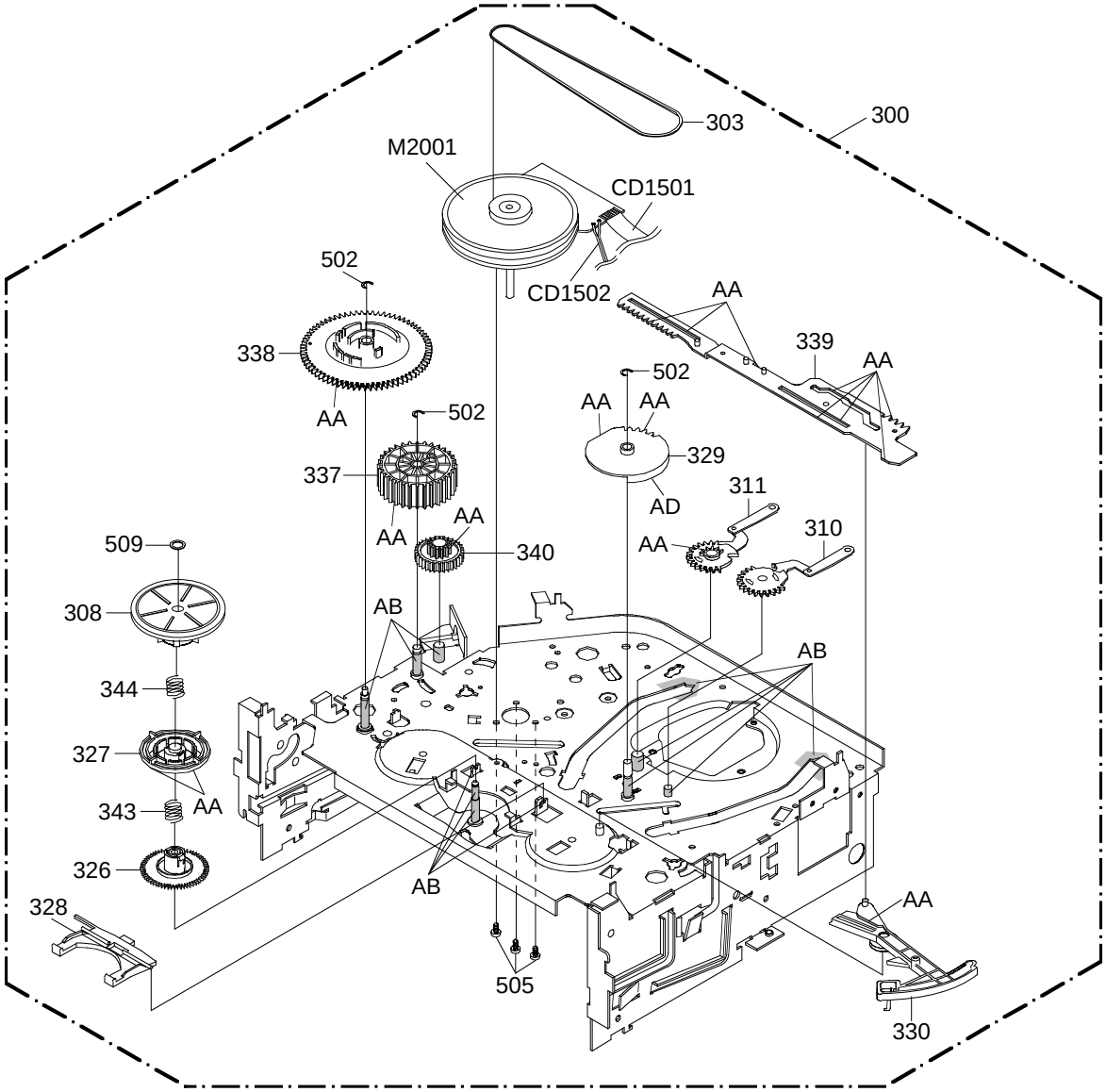

CLASS	PART NO.	MARK
GREASE	G-555G	AA
	MG-33	AB
	FG-84M	AC
	FL-721	AD

NOTE: Applying positions AA, AB, AC and AD for the grease are displayed for this section.
Check if the correct grease is applied for each position.

#	⚠	REF No.	PART No.	PART NAME, DESCRIPTION	

****

MECHANISM ASSEMBLY <M4>

		300	X-A2C301N420K	DECK ASSY	A2C301N420K
		301	X-85OA400234	PINCH ROLLER BLOCK	
		302	X-85OP900746	BRACKET,TOP 3V	
		303	X-85OP200290	BELT,CAPSTAN (S)	
		304	X-85OP600581	WORM	
		305	X-85OP500083	BASE,AC HEAD	
		306	X-85OP800324	SPRING,AC HEAD	
		307	X-85OA000459	MAIN CHASSIS ASS'Y	
		308	X-85OA200089	CLUTCH ASS'Y	
		309	X-85OA200090	ARM IDLER ASS'Y	
		310	X-85OA300065	LOADING ARM S UNIT	
		311	X-85OA300066	LOADING ARM T UNIT	
		312	X-85OA400223	INCLINED BASE T UINT 3S	
		313	X-85OA400232	P5 ARM ASS'Y 2	
		314	X-85OA400235	TENSION ARM ASS'Y 2	
		315	X-85OA400231	INCLINED BASE S UNIT	
		316	X-85OP800358	SPRING,LOCKER	
		317	X-85OP900736	CASS,HOLDER	
		318	X-85OP900748	CASS,SIDE L	
		319	X-85OP900749	CASS,SIDE R	
		320	X-85OP900739	LOCKER,R	
		321	X-85OA900228	LINK UNIT	
		322	X-85OP000496	POST,CASS GUIDE	
		323	X-85OP200316	REEL,S (S)	
		324	X-85OP200317	REEL,T (S)	
		325	X-85OP200308	GEAR,IDLER	
		326	X-85OP200311	GEAR,CLUTCH	
		327	X-85OP200312	GEAR,COUPLING	
		328	X-85OP200313	LEVER,CLUTCH	
		329	X-85OP300194	GEAR,MAIN LOADING	
		330	X-85OP400490	LEVER,TENSION	
		331	X-85OP400492	HOLDER,TENSION	
		332	X-85OP400520	CAP.P4	
		333	X-85OP400542	BAND,TENSION	
		334	X-85OP400533	CONNECT,TENSION	
		335	X-85OP600573	ARM,BRAKE T	
		336	X-85OP600584	BAND,BRAKE T	
		337	X-85OP600577	CAM,PINCH ROLLER	
		338	X-85OP600578	CAM,MAIN	
		339	X-85OP600579	ROD,MAIN	
		340	X-85OP600582	GEAR,JOINT	
		341	X-85OP800322	SPRING,TENSION	
		342	X-85OP800360	SPRING,BRAKE T	
		343	X-85OP800355	SPRING,COUPLING	
		344	X-85OP800356	SPRING,RING	
		345	X-85OP900750	LEVER,LINK 2	
		346	X-85OP900744	LEVER,FLAP	
		347	X-85OP900745	CASS,OPENER	
		348	X-85OP700035	REFLECTOR,LED	

#	⚠	REF No.	PART No.	PART NAME, DESCRIPTION	
		501	X-8107226804	SCREW,TAP TITE(S) BIND	2.6x8
		502	X-83ETW30000	E-RING	3
		503	X-8107226404	SCREW,TAP TITE(S) BIND	2.6x4
		504	X-8102120604	SCREW,PAN	M2x6
		505	X-8109126604	SCREW,TAP TITE(B) PAN	2.6x6
		506	X-810A130404	SCREW/WASHER(A)	M3x4
		507	X-810A126504	SCREW/WASHER(A)	M2.6x5
		508	X-82Q264713N	POLYSLIDER WASHER	2.6x4.7xT0.13
		509	X-82P184505N	POLYSLIDER WASHER(CUT)	1.8x4.5xT0.5
		510	X-8107226604	SCREW,TAP TITE(S) BIND	2.6x6
		CD1501	X-122H071704	CORD JUMPER	2H071704
		CD1502	X-122Y021902	CORD JUMPER	2Y021902
		H5001	X-1523Q91003	HEAD (AUDIO CONTROL)	VTR-1X2RPE22-756
		H5002	X-1543Q02014	HEAD (FULL ERASE)	VTR-1X2ERS11-154
	⚠	M101	X-1596P98001	MOTOR (LOADING)	MXN13FB12K3
	⚠	M2001	X-1510S98038	CAPSTAN DD UNIT	F2QVB33
		M2003	X-1589S11017	MICRO MOTOR	I2OAL05
	⚠	UN4001	X-A2C301N500	CYLINDER UNIT ASS'Y	A2C301N500

3.4 ELECTRICAL PARTS LIST

****

VCR/DVD BOARD ASSEMBLY <03>

Note
When replacing parts in repair, use chip parts although Melf parts may be used at the time of factory shipment.

#	⚠	REF No.	PART No.	PART NAME, DESCRIPTION	
		PCBB00	X-A2C301TB00	PCB ASSY	
		R101	NRSA63J-561X	MG RESISTOR	560Ω,1/16W
		R102	NRSA63J-103X	MG RESISTOR	10KΩ,1/16W
		R103	NRSA63J-103X	MG RESISTOR	10KΩ,1/16W
		R105	NRSA63J-102X	MG RESISTOR	1KΩ,1/16W
		R106	NRSA63J-681X	MG RESISTOR	680Ω,1/16W
		R107	NRSA63J-332X	MG RESISTOR	3.3KΩ,1/16W
		R108	NRSA63J-223X	MG RESISTOR	22KΩ,1/16W
		R109	NRSA63J-102X	MG RESISTOR	1KΩ,1/16W
		R110	NRSA63J-822X	MG RESISTOR	8.2KΩ,1/16W
		R111	NRSA63J-822X	MG RESISTOR	8.2KΩ,1/16W
		R112	NRSA63J-334X	MG RESISTOR	330KΩ,1/16W
		R113	NRSA63J-221X	MG RESISTOR	220Ω,1/16W
		R114	NRSA02J-203X	MG RESISTOR	20KΩ,1/16W
		R115	NRSA63J-821X	MG RESISTOR	820Ω,1/16W
		R116	NRSA63J-153X	MG RESISTOR	15KΩ,1/16W
		R117	NRSA63J-682X	MG RESISTOR	6.8KΩ,1/16W
		R119	NRSA63J-182X	MG RESISTOR	1.8KΩ,1/16W
		R120	NRSA63J-221X	MG RESISTOR	220Ω,1/16W
		R121	NRSA63J-102X	MG RESISTOR	1KΩ,1/16W
		R122	NRSA63J-104X	MG RESISTOR	100KΩ,1/16W
		R123	NRSA63J-222X	MG RESISTOR	2.2KΩ,1/16W
		R124	NRSA63J-823X	MG RESISTOR	82KΩ,1/16W
		R126	NRSA63J-182X	MG RESISTOR	1.8KΩ,1/16W
		R127	NRSA02J-684X	MG RESISTOR	680KΩ,1/16W
		R129	NRSA63J-182X	MG RESISTOR	1.8KΩ,1/16W
		R131	NRSA63J-152X	MG RESISTOR	1.5KΩ,1/16W
		R132	NRSA63J-332X	MG RESISTOR	3.3KΩ,1/16W
		R133	NRSA63J-822X	MG RESISTOR	8.2KΩ,1/16W
		R136	NRSA63J-223X	MG RESISTOR	22KΩ,1/16W
		R137	QRE141J-123Y	RESISTOR	12KΩ,1/4W
		R138	NRSA63J-223X	MG RESISTOR	22KΩ,1/16W
		R139	NRSA63J-123X	MG RESISTOR	12KΩ,1/16W
		R141	NRSA63J-102X	MG RESISTOR	1KΩ,1/16W
		R142	NRSA63J-102X	MG RESISTOR	1KΩ,1/16W
		R143	NRSA63J-102X	MG RESISTOR	1KΩ,1/16W
		R301	NRSA63J-333X	MG RESISTOR	33KΩ,1/16W
		R302	QRE141J-102Y	RESISTOR	1KΩ,1/4W
		R304	NRSA63J-103X	MG RESISTOR	10KΩ,1/16W
		R305	NRSA63J-102X	MG RESISTOR	1KΩ,1/16W
	⚠	R501	QRZ0111-335	FUSI RESISTOR	3.3MΩ,1/2W
	⚠	R502	X-R3X181R82J	OMF RESISTOR	0.82Ω,1W
	⚠	R503	X-R002T2155J	RESISTOR	1.5MΩ,1/2W
	⚠	R504	QRE121J-561Y	RESISTOR	560Ω,1/2W
		R506	QRE121J-105Y	RESISTOR	1MΩ,1/2W
		R507	NRSA63J-103X	MG RESISTOR	10KΩ,1/16W
		R508	NRSA63J-101X	MG RESISTOR	100Ω,1/16W
		R509	NRSA63J-101X	MG RESISTOR	100Ω,1/16W
		R510	NRSA63J-104X	MG RESISTOR	100KΩ,1/16W
	⚠	R512	X-R3X181683J	OMF RESISTOR	68KΩ,1W
		R513	QRE141J-391Y	RESISTOR	390Ω,1/4W
		R514	QRE121J-221Y	RESISTOR	220Ω,1/2W
		R515	NRSA63J-682X	MG RESISTOR	6.8KΩ,1/16W
	⚠	R516	X-R63581R22J	FUSI RESISTOR	0.22Ω,1W
	⚠	R517	X-R002T2821J	RESISTOR	820Ω,1/2W
		R518	NRSA63J-151X	MG RESISTOR	150Ω,1/16W
		R519	NRSA63J-102X	MG RESISTOR	1KΩ,1/16W
		R520	NRSA02F-332X	MG RESISTOR	3.3KΩ,1/16W
		R521	NRSA02J-391X	MG RESISTOR	390Ω,1/16W
		R522	NRSA02F-332X	MG RESISTOR	3.3KΩ,1/16W
		R523	NRSA63J-682X	MG RESISTOR	6.8KΩ,1/16W
		R524	NRSA63J-101X	MG RESISTOR	100Ω,1/16W
		R525	NRSA63J-103X	MG RESISTOR	10KΩ,1/16W
		R526	X-R803R9122F	MG RESISTOR	1.2KΩ,1/16W
		R527	NRSA02J-101X	MG RESISTOR	100Ω,1/4W
		R528	NRSA02J-392X	MG RESISTOR	3.9KΩ,1/16W
		R529	NRSA63J-222X	MG RESISTOR	2.2KΩ,1/16W
		R530	NRSA63J-330X	MG RESISTOR	33Ω,1/16W
		R531	NRSA63F-821X	MG RESISTOR	820Ω,1/16W
		R533	QRE141J-221Y	RESISTOR	220Ω,1/4W
		R534	NRSA63J-223X	MG RESISTOR	22KΩ,1/16W
		R535	NRSA63J-223X	MG RESISTOR	22KΩ,1/16W
		R536	NRSA63J-561X	MG RESISTOR	560Ω,1/16W
		R537	NRSA63J-221X	MG RESISTOR	220Ω,1/16W
		R538	NRSA63J-221X	MG RESISTOR	220Ω,1/16W
		R540	NRSA63J-471X	MG RESISTER	470Ω,1/16W
		R541	QRE141J-223Y	RESISTOR	22KΩ,1/4W
		R542	NRSA63J-151X	MG RESISTOR	150Ω,1/16W
		R543	NRSA63J-104X	MG RESISTOR	100KΩ,1/16W
		R544	NRSA63J-223X	MG RESISTOR	22KΩ,1/16W
		R651	NRSA02J-101X	MG RESISTOR	100Ω,1/4W
		R653	NRSA63J-331X	MG RESISTOR	330Ω,1/16W
		R657	NRSA63J-272X	MG RESISTOR	2.7KΩ,1/16W
		R658	NRSA63J-182X	MG RESISTOR	1.8KΩ,1/16W
		R659	NRSA63J-152X	MG RESISTOR	1.5KΩ,1/16W
		R661	NRSA63J-821X	MG RESISTOR	820Ω,1/16W
		R662	NRSA63J-181X	MG RESISTOR	180Ω,1/16W
		R663	NRSA63J-181X	MG RESISTOR	180Ω,1/16W
		R664	NRSA63J-821X	MG RESISTOR	820Ω,1/16W
		R665	NRSA63J-181X	MG RESISTOR	180Ω,1/16W
		R666	NRSA63J-181X	MG RESISTOR	180Ω,1/16W
		R667	NRSA63J-181X	MG RESISTOR	180Ω,1/16W
		R668	NRSA63J-181X	MG RESISTOR	180Ω,1/16W
		R669	NRSA63J-821X	MG RESISTOR	820Ω,1/16W
		R670	NRSA63J-181X	MG RESISTOR	180Ω,1/16W
		R671	QRE141J-821Y	RESISTOR	820Ω,1/4W
		R672	NRSA63J-181X	MG RESISTOR	180Ω,1/16W
		R673	NRSA63J-181X	MG RESISTOR	180Ω,1/16W
		R674	NRSA63J-181X	MG RESISTOR	180Ω,1/16W
		R675	NRSA63J-821X	MG RESISTOR	820Ω,1/16W
		R683	NRSA63J-561X	MG RESISTOR	560Ω,1/16W
		R701	NRSA63J-152X	MG RESISTOR	1.5KΩ,1/16W
		R702	NRSA63J-152X	MG RESISTOR	1.5KΩ,1/16W
		R703	NRSA63J-103X	MG RESISTOR	10KΩ,1/16W
		R704	NRSA63J-103X	MG RESISTOR	10KΩ,1/16W
		R707	NRSA63J-473X	MG RESISTOR	47KΩ,1/16W
		R708	NRSA63J-682X	MG RESISTOR	6.8KΩ,1/16W
		R711	NRSA63J-473X	MG RESISTOR	47KΩ,1/16W
		R712	NRSA63J-682X	MG RESISTOR	6.8KΩ,1/16W
		R714	NRSA63J-273X	MG RESISTOR	27KΩ,1/16W
		R716	NRSA63J-332X	MG RESISTOR	3.3KΩ,1/16W
		R717	NRSA63J-225X	MG RESISTOR	2.2MΩ,1/16W
		R718	NRSA63J-102X	MG RESISTOR	1KΩ,1/16W
		R719	NRSA63J-331X	MG RESISTOR	330Ω,1/16W

#	⚠	REF No.	PART No.	PART NAME, DESCRIPTION	
		R720	NRSA63J-332X	MG RESISTOR	3.3KΩ,1/16W
		R721	NRSA63J-153X	MG RESISTOR	15KΩ,1/16W
		R722	NRSA63J-153X	MG RESISTOR	15KΩ,1/16W
		R723	QRE141J-471Y	RESISTOR	470Ω,1/4W
		R2003	NRSA63J-104X	MG RESISTOR	100KΩ,1/16W
		R2004	NRSA63J-682X	MG RESISTOR	6.8KΩ,1/16W
		R2006	NRSA63J-472X	MG RESISTOR	4.7KΩ,1/16W
		R2007	NRSA63J-101X	MG RESISTOR	100Ω,1/16W
		R2011	NRSA63J-105X	MG RESISTOR	1MΩ, 1/16W
		R2015	NRSA63J-682X	MG RESISTOR	6.8KΩ,1/16W
		R2016	NRSA63J-103X	MG RESISTOR	10KΩ,1/16W
		R2017	NRSA63J-103X	MG RESISTOR	10KΩ,1/16W
		R2018	NRSA63J-182X	MG RESISTOR	1.8KΩ,1/16W
		R2020	NRSA63J-122X	MG RESISTOR	1.2KΩ,1/16W
		R2025	NRSA63J-221X	MG RESISTOR	220Ω,1/16W
		R2026	NRSA63J-681X	MG RESISTOR	680Ω,1/16W
		R2028	NRSA63J-122X	MG RESISTOR	1.2KΩ,1/16W
		R2029	NRSA63J-562X	MG RESISTOR	5.6KΩ,1/16W
		R2031	NRSA63J-562X	MG RESISTOR	5.6KΩ,1/16W
		R2032	NRSA63J-223X	MG RESISTOR	22KΩ,1/16W
		R2033	NRSA63J-562X	MG RESISTOR	5.6KΩ,1/16W
		R2034	NRSA63J-472X	MG RESISTOR	4.7KΩ,1/16W
		R2035	NRSA63J-223X	MG RESISTOR	22KΩ,1/16W
		R2036	NRSA63J-103X	MG RESISTOR	10KΩ,1/16W
		R2037	NRSA63J-472X	MG RESISTOR	4.7KΩ,1/16W
		R2038	NRSA63J-562X	MG RESISTOR	18KΩ,1/16W
		R2302	NRSA63J-472X	MG RESISTOR	4.7KΩ,1/16W
		R2305	NRSA63J-472X	MG RESISTOR	4.7KΩ,1/16W
		R2307	NRSA63J-472X	MG RESISTOR	4.7KΩ,1/16W
		R2310	NRSA63J-223X	MG RESISTOR	22KΩ,1/16W
		R2311	NRSA63J-101X	MG RESISTOR	100Ω,1/16W
		R2312	NRSA63J-101X	MG RESISTOR	100Ω,1/16W
		R2313	NRSA63J-103X	MG RESISTOR	10KΩ,1/16W
		R2314	NRSA63J-101X	MG RESISTOR	100Ω,1/16W
		R2317	NRSA63J-123X	MG RESISTOR	12KΩ,1/16W
		R2318	NRSA63J-153X	MG RESISTOR	15KΩ,1/16W
		R2319	NRSA63J-103X	MG RESISTOR	10KΩ,1/16W
		R2320	NRSA63J-273X	MG RESISTOR	27KΩ,1/16W
		R2321	NRSA63J-103X	MG RESISTOR	10KΩ,1/16W
		R2322	NRSA63J-103X	MG RESISTOR	10KΩ,1/16W
		R2323	NRSA63J-103X	MG RESISTOR	10KΩ,1/16W
		R2324	NRSA63J-103X	MG RESISTOR	10KΩ,1/16W
		R2605	NRSA63J-180X	MG RESISTOR	18Ω,1/16W
		R2609	NRSA63J-180X	MG RESISTOR	18Ω,1/16W
		R2610	NRSA63J-332X	MG RESISTOR	3.3KΩ,1/16W
		R2611	NRSA63J-103X	MG RESISTOR	10KΩ,1/16W
		R2612	NRSA63J-103X	MG RESISTOR	10KΩ,1/16W
		R2614	NRSA63J-472X	MG RESISTOR	4.7KΩ,1/16W
		R2615	NRSA63J-102X	MG RESISTOR	1KΩ,1/16W
		R2616	NRSA63J-103X	MG RESISTOR	10KΩ,1/16W
		R2617	NRSA63J-180X	MG RESISTOR	18Ω,1/16W
		R2619	NRSA63J-225X	MG RESISTOR	2.2MΩ,1/16W
		R2620	NRSA63J-125X	MG RESISTOR	1.2MΩ,1/16W
		R2621	NRSA63J-824X	MG RESISTOR	820KΩ,1/16W
		R2622	NRSA63J-103X	MG RESISTOR	10KΩ,1/16W
		R2623	NRSA63J-225X	MG RESISTOR	2.2MΩ,1/16W
		R2624	NRSA63J-822X	MG RESISTOR	8.2KΩ,1/16W
		R2625	NRSA63J-473X	MG RESISTOR	47KΩ,1/16W
		R2626	NRSA63J-824X	MG RESISTOR	820KΩ,1/16W
		R2627	NRSA63J-180X	MG RESISTOR	18Ω,1/16W
		R2628	NRSA63J-125X	MG RESISTOR	1.2MΩ,1/16W

#	⚠	REF No.	PART No.	PART NAME, DESCRIPTION	
		R2629	NRSA63J-103X	MG RESISTOR	10KΩ,1/16W
		R2630	NRSA63J-822X	MG RESISTOR	8.2KΩ,1/16W
		R2631	NRSA63J-473X	MG RESISTOR	47KΩ,1/16W
		R2633	NRSA63J-822X	MG RESISTOR	8.2KΩ,1/16W
		R2634	NRSA63J-473X	MG RESISTOR	47KΩ,1/16W
		R2635	NRSA63J-822X	MG RESISTOR	8.2KΩ,1/16W
		R2636	NRSA63J-473X	MG RESISTOR	47KΩ,1/16W
		R2637	NRSA63J-393X	MG RESISTOR	39KΩ,1/16W
		R2638	NRSA63J-393X	MG RESISTOR	39KΩ,1/16W
		R2639	NRSA63J-102X	MG RESISTOR	1KΩ,1/16W
		R2645	NRSA63J-332X	MG RESISTOR	3.3KΩ,1/16W
		R2647	NRSA63J-331X	MG RESISTOR	330Ω,1/16W
		R2648	NRSA63J-102X	MG RESISTOR	1KΩ,1/16W
		R2652	NRSA63J-223X	MG RESISTOR	22KΩ,1/16W
		R2653	NRSA63J-822X	MG RESISTOR	8.2KΩ,1/16W
		R2654	NRSA63J-363X	MG RESISTOR	36KΩ,1/16W
		R2656	NRSA63J-103X	MG RESISTOR	10KΩ,1/16W
		R2657	NRSA63J-682X	MG RESISTOR	6.8KΩ,1/16W
		R2658	NRSA63J-623X	MG RESISTOR	62KΩ,1/16W
		R2659	NRSA63J-103X	MG RESISTOR	10KΩ,1/16W
		R2660	NRSA63J-562X	MG RESISTOR	5.6KΩ,1/16W
		R2661	NRSA63J-682X	MG RESISTOR	6.8KΩ,1/16W
		R2665	NRSA63J-393X	MG RESISTOR	39KΩ,1/16W
		R2666	NRSA63J-682X	MG RESISTOR	6.8KΩ,1/16W
		R2670	NRSA63J-682X	MG RESISTOR	6.8KΩ,1/16W
		R2671	NRSA63J-682X	MG RESISTOR	6.8KΩ,1/16W
		R2673	NRSA63J-333X	MG RESISTOR	33KΩ,1/16W
		R2675	NRSA63J-333X	MG RESISTOR	33KΩ,1/16W
		R2678	NRSA63J-333X	MG RESISTOR	33KΩ,1/16W
		R3001	NRSA63J-562X	MG RESISTOR	5.6KΩ,1/16W
		R3002	QRE141J-121Y	RESISTOR	120Ω,1/4W
		R3003	NRSA63J-332X	MG RESISTOR	3.3KΩ,1/16W
		R3004	NRSA02J-274X	MG RESISTOR	270KΩ,1/16W
		R3006	NRSA63J-473X	MG RESISTOR	47KΩ,1/16W
		R3007	NRSA63J-682X	MG RESISTOR	6.8KΩ,1/16W
		R3008	NRSA63J-102X	MG RESISTOR	1KΩ,1/16W
		R3009	NRSA63J-472X	MG RESISTOR	4.7KΩ,1/16W
		R3010	NRSA63J-103X	MG RESISTOR	10KΩ,1/16W
		R3011	NRSA63J-473X	MG RESISTOR	47KΩ,1/16W
		R3012	NRSA63J-563X	MG RESISTOR	56KΩ,1/16W
		R3014	NRSA63J-563X	MG RESISTOR	56KΩ,1/16W
		R3015	NRSA63J-473X	MG RESISTOR	47KΩ,1/16W
		R3016	NRSA63J-271X	MG RESISTOR	270Ω,1/16W
		R3017	NRSA63J-561X	MG RESISTOR	560Ω,1/16W
		R3019	NRSA63J-473X	MG RESISTOR	47KΩ,1/16W
		R3020	NRSA63J-561X	MG RESISTOR	560Ω,1/16W
		R3022	NRSA02J-154X	MG RESISTOR	150KΩ,1/16W
		R3024	NRSA63J-153X	MG RESISTOR	15KΩ,1/16W
		R3025	NRSA63J-471X	MG RESISTOR	470Ω,1/16W
		R3026	NRSA02J-274X	MG RESISTOR	270KΩ,1/16W
		R3027	NRSA63J-153X	MG RESISTOR	15KΩ,1/16W
		R3028	NRSA63J-473X	MG RESISTOR	47KΩ,1/16W
		R3029	NRSA63J-472X	MG RESISTOR	4.7KΩ,1/16W
		R3030	NRSA63J-562X	MG RESISTOR	5.6KΩ,1/16W
		R3031	NRSA63J-105X	MG RESISTOR	1MΩ, 1/16W
		R3032	NRSA63J-103X	MG RESISTOR	10KΩ,1/16W
		R3033	NRSA63J-103X	MG RESISTOR	10KΩ,1/16W
		R3034	NRSA63J-105X	MG RESISTOR	1MΩ, 1/16W
		R3035	QRE141J-103Y	RESISTOR	10KΩ,1/4W
		R3037	NRSA63J-473X	MG RESISTOR	47KΩ,1/16W
		R3038	NRSA63J-472X	MG RESISTOR	4.7KΩ,1/16W

# ⚠ REF No.	PART No.	PART NAME, DESCRIPTION	
R3043	NRSA63J-474X	MG RESISTOR	470KΩ,1/16W
R3044	NRSA63J-332X	MG RESISTOR	3.3KΩ,1/16W
R3045	NRSA63J-332X	MG RESISTOR	3.3KΩ,1/16W
R3046	NRSA63J-103X	MG RESISTOR	10KΩ,1/16W
R3047	NRSA63J-103X	MG RESISTOR	10KΩ,1/16W
R3049	NRSA63J-473X	MG RESISTOR	47KΩ,1/16W
R3050	NRSA02J-101X	MG RESISTOR	100Ω,1/4W
R3051	NRSA63J-562X	MG RESISTOR	18KΩ,1/16W
R3053	NRSA63J-474X	MG RESISTOR	470KΩ,1/16W
R3055	NRSA63J-223X	MG RESISTOR	22KΩ,1/16W
R3056	NRSA63J-102X	MG RESISTOR	1KΩ,1/16W
R3057	NRSA63J-223X	MG RESISTOR	22KΩ,1/16W
R3062	NRSA63J-102X	MG RESISTOR	1KΩ,1/16W
R3063	NRSA63J-102X	MG RESISTOR	1KΩ,1/16W
R3083	NRSA63J-333X	MG RESISTOR	33KΩ,1/16W
R3087	NRSA63J-333X	MG RESISTOR	33KΩ,1/16W
R4001	NRSA63J-472X	MG RESISTOR	4.7KΩ,1/16W
R4002	NRSA63J-472X	MG RESISTOR	4.7KΩ,1/16W
R4003	NRSA63J-472X	MG RESISTOR	4.7KΩ,1/16W
R4004	NRSA63J-472X	MG RESISTOR	4.7KΩ,1/16W
R4006	NRSA63J-472X	MG RESISTOR	4.7KΩ,1/16W
R4007	NRSA63J-472X	MG RESISTOR	4.7KΩ,1/16W
R4008	NRSA63J-102X	MG RESISTOR	1KΩ,1/16W
R4009	NRSA63J-472X	MG RESISTOR	4.7KΩ,1/16W
R4012	NRSA63J-472X	MG RESISTOR	4.7KΩ,1/16W
R4013	NRSA63J-472X	MG RESISTOR	4.7KΩ,1/16W
R4014	NRSA63J-472X	MG RESISTOR	4.7KΩ,1/16W
R4016	NRSA63J-472X	MG RESISTOR	4.7KΩ,1/16W
R4017	NRSA63J-472X	MG RESISTOR	4.7KΩ,1/16W
R4018	NRSA63J-472X	MG RESISTOR	4.7KΩ,1/16W
R4019	NRSA63J-330X	MG RESISTOR	33Ω,1/16W
R4020	NRSA63J-472X	MG RESISTOR	4.7KΩ,1/16W
R4021	NRSA63J-472X	MG RESISTOR	4.7KΩ,1/16W
R4022	NRSA63J-101X	MG RESISTOR	100Ω,1/16W
R4024	NRSA63J-330X	MG RESISTOR	33Ω,1/16W
R4025	NRSA63J-101X	MG RESISTOR	100Ω,1/16W
R4026	NRSA63J-330X	MG RESISTOR	33Ω,1/16W
R4027	NRSA63J-330X	MG RESISTOR	33Ω,1/16W
R4028	NRSA63J-330X	MG RESISTOR	33Ω,1/16W
R4029	NRSA63J-101X	MG RESISTOR	100Ω,1/16W
R4030	NRSA63J-101X	MG RESISTOR	100Ω,1/16W
R4031	NRSA63J-101X	MG RESISTOR	100Ω,1/16W
R4032	NRSA63F-511X	MG RESISTOR	510Ω,1/16W
R4033	NRSA63J-100X	MG RESISTOR	10Ω,1/16W
R4034	NRSA63F-102X	MG RESISTOR	1KΩ,1/16W
R4035	NRSA02F-391X	MG RESISTOR	390Ω,1/16W
R4036	NRSA63J-105X	MG RESISTOR	1MΩ, 1/16W
R4038	NRSA63J-472X	MG RESISTOR	4.7KΩ,1/16W
R4039	NRSA63J-472X	MG RESISTOR	4.7KΩ,1/16W
R4044	NRSA63J-472X	MG RESISTOR	4.7KΩ,1/16W
R4049	NRSA63J-103X	MG RESISTOR	10KΩ,1/16W
R4051	NRSA63J-472X	MG RESISTOR	4.7KΩ,1/16W
R4052	NRSA63J-472X	MG RESISTOR	4.7KΩ,1/16W
R4055	NRSA63J-472X	MG RESISTOR	4.7KΩ,1/16W
R4056	NRSA63J-472X	MG RESISTOR	4.7KΩ,1/16W
R4058	NRSA63J-472X	MG RESISTOR	4.7KΩ,1/16W
R4059	NRSA63J-472X	MG RESISTOR	4.7KΩ,1/16W
R4060	NRSA63J-2R2X	MG RESISTOR	2.2Ω,1/16W
R4062	NRSA63J-472X	MG RESISTOR	4.7KΩ,1/16W
R4076	NRSA63J-103X	MG RESISTOR	10KΩ,1/16W
R4078	NRSA63J-332X	MG RESISTOR	3.3KΩ,1/16W

# ⚠ REF No.	PART No.	PART NAME, DESCRIPTION	
R8002	NRSA63J-472X	MG RESISTOR	4.7KΩ,1/16W
R8003	NRSA02J-680X	MG RESISTOR	68Ω,1/16W
R8004	NRSA02J-121X	MG RESISTOR	120Ω,1/16W
R8005	NRSA63J-100X	MG RESISTOR	10Ω,1/16W
R8006	NRSA63J-100X	MG RESISTOR	10Ω,1/16W
R8007	NRSA63J-101X	MG RESISTOR	100Ω,1/16W
R8008	NRSA63J-2R2X	MG RESISTOR	2.2Ω,1/16W
R8009	QRE121J-471Y	RESISTOR	470Ω,1/2W
R8010	NRSA02J-750X	MG RESISTOR	75Ω,1/16W
R8011	NRSA63J-101X	MG RESISTOR	100Ω,1/16W
R8014	NRSA02J-391X	MG RESISTOR	390Ω,1/16W
R8015	NRSA02J-391X	MG RESISTOR	390Ω,1/16W
R8016	NRSA63J-222X	MG RESISTOR	2.2KΩ,1/16W
R8017	NRSA63J-222X	MG RESISTOR	2.2KΩ,1/16W
R8019	NRSA02J-750X	MG RESISTOR	75Ω,1/16W
R8020	NRSA63J-103X	MG RESISTOR	10KΩ,1/16W
R8021	NRSA02J-560X	MG RESISTOR	56Ω,1/16W
R8023	NRSA63J-2R2X	MG RESISTOR	2.2Ω,1/16W
R8024	NRSA63J-102X	MG RESISTOR	1KΩ,1/16W
R8025	NRSA63J-102X	MG RESISTOR	1KΩ,1/16W
R8026	NRSA63J-103X	MG RESISTOR	10KΩ,1/16W
R8027	NRSA63J-471X	MG RESISTOR	470Ω,1/16W
R8028	NRSA63J-2R2X	MG RESISTOR	2.2Ω,1/16W
R8029	NRSA63J-2R2X	MG RESISTOR	2.2Ω,1/16W
R8030	NRSA63J-2R2X	MG RESISTOR	2.2Ω,1/16W
R8031	NRSA63J-102X	MG RESISTOR	1KΩ,1/16W
R8032	NRSA63J-471X	MG RESISTOR	470Ω,1/16W
R8033	NRSA63J-474X	MG RESISTOR	470KΩ,1/16W
R8034	NRSA63J-103X	MG RESISTOR	10KΩ,1/16W
R8035	NRSA63J-103X	MG RESISTOR	10KΩ,1/16W
R8036	NRSA63J-104X	MG RESISTOR	100KΩ,1/16W
R8037	NRSA63J-104X	MG RESISTOR	100KΩ,1/16W
R8038	NRSA63J-103X	MG RESISTOR	10KΩ,1/16W
R8039	NRSA63J-473X	MG RESISTOR	47KΩ,1/16W
R8040	NRSA63J-473X	MG RESISTOR	47KΩ,1/16W
R8041	NRSA63J-103X	MG RESISTOR	10KΩ,1/16W
R8042	NRSA63J-103X	MG RESISTOR	10KΩ,1/16W
R8043	NRSA63J-123X	MG RESISTOR	12KΩ,1/16W
R8044	NRSA63J-123X	MG RESISTOR	12KΩ,1/16W
R8045	NRSA63J-103X	MG RESISTOR	10KΩ,1/16W
R8046	NRSA63J-103X	MG RESISTOR	10KΩ,1/16W
R8049	NRSA63J-101X	MG RESISTOR	100Ω,1/16W
R8050	NRSA63J-101X	MG RESISTOR	100Ω,1/16W
R8051	NRSA63J-103X	MG RESISTOR	10KΩ,1/16W
R8052	NRSA63J-332X	MG RESISTOR	3.3KΩ,1/16W
R8053	NRSA63J-471X	MG RESISTOR	470Ω,1/16W
R8054	NRSA63J-272X	MG RESISTOR	2.7KΩ,1/16W
R8055	NRSA63J-272X	MG RESISTOR	2.7KΩ,1/16W
R8056	NRSA63J-471X	MG RESISTOR	470Ω,1/16W
R8059	NRSA63J-472X	MG RESISTOR	4.7KΩ,1/16W
R8060	QRE141J-220Y	RESISTOR	22Ω,1/4W
R8061	NRSA02F-820X	MG RESISTOR	82Ω,1/16W
R8062	NRSA63F-750X	MG RESISTOR	75Ω,1/16W
R8063	NRSA63F-750X	MG RESISTOR	75Ω,1/16W
R8065	NRSA63J-471X	MG RESISTOR	470Ω,1/16W
R8067	NRSA63J-471X	MG RESISTOR	470Ω,1/16W
R8068	NRSA63F-750X	MG RESISTOR	75Ω,1/16W
R8069	NRSA63J-103X	MG RESISTOR	10KΩ,1/16W
R8070	NRSA63J-103X	MG RESISTOR	10KΩ,1/16W
R8071	NRSA63J-101X	MG RESISTOR	100Ω,1/16W
R8072	NRSA63J-101X	MG RESISTOR	100Ω,1/16W

#	⚠	REF No.	PART No.	PART NAME, DESCRIPTION	
		R8073	NRSA63J-101X	MG RESISTOR	100Ω,1/16W
		R8078	NRSA63J-2R2X	MG RESISTOR	2.2Ω,1/16W
		C101	X-P232W1223J	CAPACITOR	0.022μF,100V
		C103	X-E524U0220D	E CAPACITOR	22μF,6.3V
		C104	QETN0JM-227Z	E CAPACITOR	220μF,6.3V
		C105	X-E524U0220D	E CAPACITOR	22μF,6.3V
		C106	NCB31HK-103X	CAPACITOR	0.01μF,50V
		C107	NCB31HK-153X	CAPACITOR	0.015μF,50V
		C108	NCB31HK-103X	CAPACITOR	0.01μF,50V
		C109	NCB31CK-104X	CAPACITOR	0.1μF,16V
		C110	X-E524U2470D	E CAPACITOR	47μF,16V
		C112	X-E524U1221D	E CAPACITOR	220μF,10V
		C114	NCB31CK-104X	CAPACITOR	0.1μF,16V
		C115	X-E524U1330D	E CAPACITOR	33μF,10V
		C116	NCB31EZ-104X	CAPACITOR	0.1μF,25V
		C117	NCB31HK-103X	CAPACITOR	0.01μF,50V
		C118	NCB31HK-103X	CAPACITOR	0.01μF,50V
		C119	X-E524U2100D	E CAPACITOR	10μF,16V
		C120	X-E524U5010D	E CAPACITOR	1μF,50V
		C121	NCB31HK-272X	CAPACITOR	0.0027μF,50V
		C122	NCB31HK-122X	CAPACITOR	0.0012μF,50V
		C123	X-E02LU54R7M	E CAPACITOR	4.7μF,50V
		C124	X-E524U5010D	E CAPACITOR	1μF,50V
		C125	NCB31HK-391X	CAPACITOR	390pF,50V
		C126	NCB31CK-104X	CAPACITOR	0.1μF,16V
		C127	X-CS0PCH4G2J	CAPACITOR	180pF,50V
		C129	X-CS0RB0216K	CAPACITOR	1μF,16V
		C131	X-E524U0101D	E CAPACITOR	100μF,6.3V
		C132	NCF21EZ-105X	CAPACITOR	1μF,25V
		C133	NCF21EZ-105X	CAPACITOR	1μF,25V
		C134	NCF21EZ-105X	CAPACITOR	1μF,25V
		C135	X-E02LU5R22M	E CAPACITOR	0.22μF,50V
		C136	QETN1VM-226Z	E CAPACITOR	22μF,35V
		C137	X-E524U5010D	E CAPACITOR	1μF,50V
		C138	QETN1HM-105Z	E CAPACITOR	1μF,50V
		C139	NCB31EZ-104X	CAPACITOR	0.1μF,25V
		C140	X-E62KU54R7M	E CAPACITOR	4.7μF,50V
		C141	NCB31HK-103X	CAPACITOR	0.01μF,50V
		C142	X-E524U2470D	E CAPACITOR	47μF,16V
		C143	NCB31EZ-104X	CAPACITOR	0.1μF,25V
		C144	NCB31HK-103X	CAPACITOR	0.01μF,50V
		C145	X-CS0PB04H4K	CAPACITOR	0.022μF,50V
		C146	X-E524U5010D	E CAPACITOR	1μF,50V
		C147	X-CS0PB04H4K	CAPACITOR	0.022μF,50V
		C148	X-E524U5010D	E CAPACITOR	1μF,50V
		C151	QETN1HM-105Z	E CAPACITOR	1μF,50V
		C152	QETN1CM-476Z	E CAPACITOR	47μF,16V
		C154	NCB31CK-104X	CAPACITOR	0.1μF,16V
		C155	X-CS0RB0216K	CAPACITOR	1μF,16V
		C156	NCB31EZ-104X	CAPACITOR	0.1μF,25V
		C163	X-E524U0470D	E CAPACITOR	47μF,6.3V
		C165	NCF21HZ-473X	CAPACITOR	0.047μF,50V
		C166	NCB21HK-683X	CAPACITOR	0.068μF,50V
		C169	NCF21HZ-473X	CAPACITOR	0.047μF,50V
		C172	X-CS0PCH4H1J	CAPACITOR	22pF,50V
		C301	NCF31HZ-103X	CAPACITOR	0.01μF,50V
		C303	NCF21HZ-104X	CAPACITOR	0.1μF,50V
		C309	QETN0JM-227Z	E CAPACITOR	220μF,6.3V
		C313	QEKJ1CM-106Z	E CAPACITOR	10μF,16V
		C315	QEKJ1CM-106Z	E CAPACITOR	10μF,16V
		C316	NCB31EZ-104X	CAPACITOR	0.1μF,25V

#	⚠	REF No.	PART No.	PART NAME, DESCRIPTION	
		C318	QEKJ1CM-106Z	E CAPACITOR	10μF,16V
	⚠	C501	X-E5EZF2222M	E CAPACITOR	2200μF,16V
	⚠	C502	X-P2122B104M	CMP	0.1μF,275V
		C504	QETN0JM-227Z	E CAPACITOR	220μF,6.3V
		C505	X-E5EZU2221M	E CAPACITOR	220μF,16V
		C506	X-E5EZT0102M	E CAPACITOR	1000μF,6.3V
		C508	X-CS0PB04W3K	CAPACITOR	0.0082μF,50V
		C509	X-P1S3T0183J	F CAPACITOR	0.018μF,50V
		C510	X-E5EZU5220M	E CAPACITOR	22μF,50V
	⚠	C511	QEZ0605-107	E CAPACITOR	100μF,200V
		C513	X-C0PLRR7H2K	CAPACITOR	220pF,2KV
		C514	X-E5EZU1331M	E CAPACITOR	330μF,10V
	⚠	C515	QCB12HK-103	CAPACITOR	0.01μF,500V
	⚠	C516	X-CD39E0MQ3M	CAPACITOR	0.0047μF,250V
		C517	X-E5EZU0471M	E CAPACITOR	470μF,6.3V
	⚠	C518	X-E5EZ01222M	E CAPACITOR	2200μF,10V
	⚠	C519	X-E5EZ01222M	E CAPACITOR	2200μF,10V
		C520	NCF21EZ-105X	CAPACITOR	1μF,25V
		C521	X-E5EZU2101M	E CAPACITOR	100μF,16V
	⚠	C522	X-E5EZU5220M	E CAPACITOR	22μF,50V
		C524	X-CS0PB04H4K	CAPACITOR	0.022μF,50V
		C525	QCZ0131-681	CAPACITOR	680pF,2KV
		C527	X-CS0PB04W3K	CAPACITOR	0.0082μF,50V
		C528	X-E5EZU2101M	E CAPACITOR	100μF,16V
	⚠	C529	X-P2122B104M	CMP	0.1μF,275V
		C531	QCB32HK-561Z	CAPACITOR	560pF,500V
		C533	X-E5EZU2221M	E CAPACITOR	220μF,16V
		C534	NCF21EZ-105X	CAPACITOR	1μF,25V
		C652	QETN0JM-107Z	E CAPACITOR	100μF,6.3V
		C701	X-CS0PB04H4K	CAPACITOR	0.022μF,50V
		C702	X-E524U53R3D	E CAPACITOR	3.3μF,50V
		C703	X-E02LU54R7M	E CAPACITOR	4.7μF,50V
		C704	X-E524U54R7D	E CAPACITOR	4.7μF,50V
		C705	X-E02LU54R7M	E CAPACITOR	4.7μF,50V
		C706	X-E524U54R7D	E CAPACITOR	4.7μF,50V
		C707	NCB31CK-104X	CAPACITOR	0.1μF,16V
		C708	X-E524U2100D	E CAPACITOR	10μF,16V
		C709	QETN1HM-106Z	E CAPACITOR	10μF,50V
		C711	QETN1HM-106Z	E CAPACITOR	10μF,50V
		C713	QETN1HM-106Z	E CAPACITOR	10μF,50V
		C714	X-E524U2100D	E CAPACITOR	10μF,16V
		C715	X-CS0PCH4U2J	CAPACITOR	680pF,50V
		C716	NCF21EZ-105X	CAPACITOR	1μF,25V
		C719	QETN1HM-106Z	E CAPACITOR	10μF,50V
		C720	QETN1HM-336Z	E CAPACITOR	33μF,50V
		C721	X-CS0PCH4U2J	CAPACITOR	680pF,50V
		C722	NCB31CK-104X	CAPACITOR	0.1μF,16V
		C723	NCF31HZ-103X	CAPACITOR	0.01μF,50V
		C724	NCF31HZ-103X	CAPACITOR	0.01μF,50V
		C725	NCB21EK-104X	CAPACITOR	0.1μF,25V
		C726	NCB21HK-153X	CAPACITOR	0.015μF,50V
		C727	X-E524U2100D	E CAPACITOR	10μF,16V
		C728	QETN1HM-106Z	E CAPACITOR	10μF,50V
		C729	NCB31HK-103X	CAPACITOR	0.01μF,50V
		C730	NCB31HK-153X	CAPACITOR	0.015μF,50V
		C731	X-CS0RB02H5K	CAPACITOR	0.22μF,16V
		C732	NCF31HZ-103X	CAPACITOR	0.01μF,50V
		C734	NCB31CK-104X	CAPACITOR	0.1μF,16V
		C735	X-E02LU54R7M	E CAPACITOR	4.7μF,50V
		C736	NCB31HK-102X	CAPACITOR	0.001μF,50V
		C737	X-E02LU54R7M	E CAPACITOR	4.7μF,50V

# ⚠ REF No.	PART No.	PART NAME, DESCRIPTION	
C738	NCF31HZ-103X	CAPACITOR	0.01µF,50V
C739	QETN1CM-476Z	E CAPACITOR	47µF,16V
C740	QETN1EM-336Z	E CAPACITOR	33µF,25V
C741	X-E524U2100D	E CAPACITOR	10µF,16V
C742	X-E524U2100D	E CAPACITOR	10µF,16V
C743	X-E524U5R22D	E CAPACITOR	0.22µF,50V
C744	NCB31EZ-104X	CAPACITOR	0.1µF,25V
C746	NCB31EZ-104X	CAPACITOR	0.1µF,25V
C747	QETN1HM-106Z	E CAPACITOR	10µF,50V
C748	NCB31EZ-104X	CAPACITOR	0.1µF,25V
C749	NCB31EZ-104X	CAPACITOR	0.1µF,25V
C750	X-E524U52R2D	E CAPACITOR	2.2µF,50V
C751	NCB31EZ-104X	CAPACITOR	0.1µF,25V
C752	X-E524U2220D	E CAPACITOR	22µF,16V
C754	QETN1CM-476Z	E CAPACITOR	47µF,16V
C755	X-CS0PB04H4K	CAPACITOR	0.022µF,50V
C756	X-E524U2100D	E CAPACITOR	10µF,16V
C757	NCF21EZ-105X	CAPACITOR	1µF,25V
C758	X-E524U2220D	E CAPACITOR	22µF,16V
C759	QETN1VM-226Z	E CAPACITOR	22µF,35V
C760	NCF21EZ-105X	CAPACITOR	1µF,25V
C762	X-CS0PCH4U2J	CAPACITOR	680pF,50V
C763	X-CS0PCH4U2J	CAPACITOR	680pF,50V
C2002	NCB31EZ-104X	CAPACITOR	0.1µF,25V
C2003	NCB31EZ-104X	CAPACITOR	0.1µF,25V
C2006	QETN0JM-107Z	E CAPACITOR	100µF,6.3V
C2009	NCB31EZ-104X	CAPACITOR	0.1µF,25V
C2015	NDC31HJ-471X	CAPACITOR	470pF,50V
C2018	NDC31HJ-471X	CAPACITOR	470pF,50V
C2019	NCB31CK-104X	CAPACITOR	0.1µF,16V
C2020	NCB31EZ-104X	CAPACITOR	0.1µF,25V
C2021	QECP0JM-157	E CAPACITOR	150µF,6.3V
C2022	NCB31CK-104X	CAPACITOR	0.1µF,16V
C2023	NCB31EZ-104X	CAPACITOR	0.1µF,25V
C2024	NCB31EZ-104X	CAPACITOR	0.1µF,25V
C2027	NCB31EZ-104X	CAPACITOR	0.1µF,25V
C2028	NCB31EZ-104X	CAPACITOR	0.1µF,25V
C2032	NDC31HJ-4R0X	CAPACITOR	4pF,50V
C2034	NCB31EZ-104X	CAPACITOR	0.1µF,25V
C2036	NCB31EZ-104X	CAPACITOR	0.1µF,25V
C2037	NCB31EZ-104X	CAPACITOR	0.1µF,25V
C2038	NCB31HK-103X	CAPACITOR	0.01µF,50V
C2039	NCB31CK-104X	CAPACITOR	0.1µF,16V
C2041	NCB31CK-104X	CAPACITOR	0.1µF,16V
C2042	NCB31CK-104X	CAPACITOR	0.1µF,16V
C2043	NDC31HJ-561X	CAPACITOR	560pF,50V
C2044	NCB31CK-104X	CAPACITOR	0.1µF,16V
C2045	NCB31EZ-104X	CAPACITOR	0.1µF,25V
C2046	NCB31CK-104X	CAPACITOR	0.1µF,16V
C2047	NCB31HK-102X	CAPACITOR	0.001µF,50V
C2048	NCB31CK-104X	CAPACITOR	0.1µF,16V
C2049	NCB31EZ-104X	CAPACITOR	0.1µF,25V
C2050	NCF31AZ-105X	CAPACITOR	1µF,10V
C2051	NCB31EZ-104X	CAPACITOR	0.1µF,25V
C2052	NCF31AZ-105X	CAPACITOR	1µF,10V
C2053	NCB31HK-103X	CAPACITOR	0.01µF,50V
C2054	NDC31HJ-100X	CAPACITOR	10pF,50V
C2055	NDC31HJ-100X	CAPACITOR	10pF,50V
C2301	NCB31CK-104X	CAPACITOR	0.1µF,16V
C2304	NCB31CK-104X	CAPACITOR	0.1µF,16V
C2306	NCB31CK-104X	CAPACITOR	0.1µF,16V

# ⚠ REF No.	PART No.	PART NAME, DESCRIPTION	
C2307	NCB31CK-104X	CAPACITOR	0.1µF,16V
C2309	QETN1CM-476Z	E CAPACITOR	47µF,16V
C2310	NCB31CK-104X	CAPACITOR	0.1µF,16V
C2315	NCB31CK-104X	CAPACITOR	0.1µF,16V
C2601	NCB31EZ-104X	CAPACITOR	0.1µF,25V
C2604	NCB31EZ-104X	CAPACITOR	0.1µF,25V
C2605	NCB31EZ-104X	CAPACITOR	0.1µF,25V
C2606	NCB31HK-102X	CAPACITOR	0.001µF,50V
C2607	QETN1HM-106Z	E CAPACITOR	10µF,50V
C2608	NCB31HK-103X	CAPACITOR	0.01µF,50V
C2609	NCB31HK-102X	CAPACITOR	0.001µF,50V
C2610	NDC31HJ-471X	CAPACITOR	470pF,50V
C2612	QETN1HM-106Z	E CAPACITOR	10µF,50V
C2614	NDC31HJ-560X	CAPACITOR	56pF,50V
C2615	NDC31HJ-560X	CAPACITOR	56pF,50V
C2616	NDC31HJ-560X	CAPACITOR	56pF,50V
C2617	NDC31HJ-560X	CAPACITOR	56pF,50V
C2618	NDC31HJ-560X	CAPACITOR	56pF,50V
C2619	NDC31HJ-470X	CAPACITOR	47pF,50V
C2621	NCB31EZ-104X	CAPACITOR	0.1µF,25V
C2622	QETN1CM-476Z	E CAPACITOR	47µF,16V
C2623	NDC31HJ-101X	CAPACITOR	100pF,50V
C2624	QETN1CM-476Z	E CAPACITOR	47µF,16V
C2625	NCB31EZ-104X	CAPACITOR	0.1µF,25V
C2626	X-CS0RB0216K	CAPACITOR	1µF,16V
C2627	QETN1CM-476Z	E CAPACITOR	47µF,16V
C2628	NCB31HK-472X	CAPACITOR	0.0047µF,50V
C2629	NDC31HJ-101X	CAPACITOR	100pF,50V
C2631	NCB31CK-473X	CAPACITOR	0.047µF,16V
C2632	X-CS0RB0216K	CAPACITOR	1µF,16V
C2633	NCB31HK-472X	CAPACITOR	0.0047µF,50V
C2634	NCB31HK-472X	CAPACITOR	0.0047µF,50V
C2635	NCB31HK-152X	CAPACITOR	0.0015µF,50V
C2636	NDC31HJ-560X	CAPACITOR	56pF,50V
C2637	NDC31HJ-561X	CAPACITOR	560pF,50V
C2638	NDC31HJ-561X	CAPACITOR	560pF,50V
C2640	NCB31HK-102X	CAPACITOR	0.001µF,50V
C2641	QETN0JM-227Z	E CAPACITOR	220µF,6.3V
C2642	NCB31EZ-104X	CAPACITOR	0.1µF,25V
C2643	NCB31HK-102X	CAPACITOR	0.001µF,50V
C3001	X-CS0RB0216K	CAPACITOR	1µF,16V
C3004	X-CS0PB04H4K	CAPACITOR	0.022µF,50V
C3005	NCB31HK-102X	CAPACITOR	0.001µF,50V
C3006	NCB31HK-102X	CAPACITOR	0.001µF,50V
C3007	NCB31CK-104X	CAPACITOR	0.1µF,16V
C3008	NCB31HK-472X	CAPACITOR	0.0047µF,50V
C3009	NCB31CK-104X	CAPACITOR	0.1µF,16V
C3010	NCB31HK-102X	CAPACITOR	0.001µF,50V
C3013	QEKJ0JM-226Z	E CAPACITOR	22µF,6.3V
C3014	NCB31EZ-104X	CAPACITOR	0.1µF,25V
C3015	X-CS0PCH4W2J	CAPACITOR	820pF,50V
C3016	QEKJ0JM-476Z	E CAPACITOR	47µF,6.3V
C3017	NCF21EZ-105X	CAPACITOR	1µF,25V
C3018	NDC31HJ-151X	CAPACITOR	150pF,50V
C3019	NCB31CK-104X	CAPACITOR	0.1µF,16V
C3020	X-CS0PB04H4K	CAPACITOR	0.022µF,50V
C3021	QEKJ1CM-106Z	E CAPACITOR	10µF,16V
C3022	NDC31HJ-471X	CAPACITOR	470pF,50V
C3023	QETN0JM-227Z	E CAPACITOR	220µF,6.3V
C3024	X-CS0PCH4G1J	CAPACITOR	18pF,50V
C3025	X-CS0PCH4G1J	CAPACITOR	18pF,50V

# ⚠ REF No.	PART No.	PART NAME, DESCRIPTION	
C3027	NCB31EZ-104X	CAPACITOR	0.1µF,25V
C3029	QEKJ0JM-476Z	E CAPACITOR	47µF,6.3V
C3030	NCF21EZ-105X	CAPACITOR	1µF,25V
C3031	NCB31HK-152X	CAPACITOR	0.0015µF,50V
C3032	QEKJ1HM-225Z	E CAPACITOR	2.2µF,50V
C3033	QETN1VM-337Z	E CAPACITOR	330µF,35V
C3034	NCF21EZ-105X	CAPACITOR	1µF,25V
C3036	NCB31EZ-104X	CAPACITOR	0.1µF,25V
C3038	NCF21EZ-105X	CAPACITOR	1µF,25V
C3040	NCF21EZ-105X	CAPACITOR	1µF,25V
C3041	NCB31HK-152X	CAPACITOR	0.0015µF,50V
C3044	X-CS0PCH4B1J	CAPACITOR	12pF,50V
C3045	QEKJ1HM-474Z	E CAPACITOR	0.47µF,50V
C3046	NDC31HJ-150X	CAPACITOR	15pF,50V
C3047	NDC31HJ-150X	CAPACITOR	15pF,50V
C3049	NDC31HJ-101X	CAPACITOR	100pF,50V
C3050	NCB31HK-103X	CAPACITOR	0.01µF,50V
C3052	QEKJ0JM-226Z	E CAPACITOR	22µF,6.3V
C3053	NCB31CK-104X	CAPACITOR	0.1µF,16V
C3061	NCB31EZ-104X	CAPACITOR	0.1µF,25V
C3065	NCB31EZ-104X	CAPACITOR	0.1µF,25V
C4001	NCB31EZ-104X	CAPACITOR	0.1µF,25V
C4002	NCB31EZ-104X	CAPACITOR	0.1µF,25V
C4003	NCB31EZ-104X	CAPACITOR	0.1µF,25V
C4004	NCB31EZ-104X	CAPACITOR	0.1µF,25V
C4005	NCB31EZ-104X	CAPACITOR	0.1µF,25V
C4006	QETN1CM-476Z	E CAPACITOR	47µF,16V
C4007	NCB31EZ-104X	CAPACITOR	0.1µF,25V
C4008	NCB31EZ-104X	CAPACITOR	0.1µF,25V
C4009	X-E02LU2101M	E CAPACITOR	100µF,16V
C4010	NCB31EZ-104X	CAPACITOR	0.1µF,25V
C4011	X-E02LU2101M	E CAPACITOR	100µF,16V
C4012	NCB31EZ-104X	CAPACITOR	0.1µF,25V
C4013	NCB31EZ-104X	CAPACITOR	0.1µF,25V
C4014	NCB31EZ-104X	CAPACITOR	0.1µF,25V
C4015	NCB31EZ-104X	CAPACITOR	0.1µF,25V
C4016	NCB31EZ-104X	CAPACITOR	0.1µF,25V
C4017	NCB31EZ-104X	CAPACITOR	0.1µF,25V
C4018	NCB31EZ-104X	CAPACITOR	0.1µF,25V
C4020	QETN1CM-476Z	E CAPACITOR	47µF,16V
C4021	NCB31EZ-104X	CAPACITOR	0.1µF,25V
C4022	QETN1CM-476Z	E CAPACITOR	47µF,16V
C4024	NCB31EZ-104X	CAPACITOR	0.1µF,25V
C4026	X-CS0PCH4G1J	CAPACITOR	18pF,50V
C4027	NCB31EZ-104X	CAPACITOR	0.1µF,25V
C4028	NCB31EZ-104X	CAPACITOR	0.1µF,25V
C4029	QETN1CM-476Z	E CAPACITOR	47µF,16V
C4030	NCB31EZ-104X	CAPACITOR	0.1µF,25V
C4031	NCB31EZ-104X	CAPACITOR	0.1µF,25V
C4032	NCB31EZ-104X	CAPACITOR	0.1µF,25V
C4033	NCB31EZ-104X	CAPACITOR	0.1µF,25V
C4034	NCB31EZ-104X	CAPACITOR	0.1µF,25V
C4035	QETN1CM-476Z	E CAPACITOR	47µF,16V
C4036	NCB31EZ-104X	CAPACITOR	0.1µF,25V
C4037	NCB31EZ-104X	CAPACITOR	0.1µF,25V
C4038	NCB31EZ-104X	CAPACITOR	0.1µF,25V
C4040	QEKJ0JM-476Z	E CAPACITOR	47µF,6.3V
C4041	NDC31HJ-100X	CAPACITOR	10pF,50V
C4042	NCB31EZ-104X	CAPACITOR	0.1µF,25V
C4043	NCB31HK-103X	CAPACITOR	0.01µF,50V
C4045	QETN0JM-227Z	E CAPACITOR	220µF,6.3V

# ⚠ REF No.	PART No.	PART NAME, DESCRIPTION	
C4046	NCB31EZ-104X	CAPACITOR	0.1µF,25V
C4048	NCB31EZ-104X	CAPACITOR	0.1µF,25V
C4049	NCB31EZ-104X	CAPACITOR	0.1µF,25V
C4050	X-E02LU2101M	E CAPACITOR	100µF,16V
C4051	NCB31EZ-104X	CAPACITOR	0.1µF,25V
C4052	NCB31EZ-104X	CAPACITOR	0.1µF,25V
C4053	NCB31EZ-104X	CAPACITOR	0.1µF,25V
C4054	NCB31EZ-104X	CAPACITOR	0.1µF,25V
C4055	NCB31HK-103X	CAPACITOR	0.01µF,50V
C4062	NCB31EZ-104X	CAPACITOR	0.1µF,25V
C4063	QETN1CM-476Z	E CAPACITOR	47µF,16V
C4069	NCB31EZ-104X	CAPACITOR	0.1µF,25V
C4070	NCB31EZ-104X	CAPACITOR	0.1µF,25V
C4071	NCB31HK-103X	CAPACITOR	0.01µF,50V
C4072	NCB31HK-103X	CAPACITOR	0.01µF,50V
C4075	NCB31HK-103X	CAPACITOR	0.01µF,50V
C4076	NDC31HJ-101X	CAPACITOR	100pF,50V
C4077	NDC31HJ-101X	CAPACITOR	100pF,50V
C4084	NCB31EZ-104X	CAPACITOR	0.1µF,25V
C4085	NDC31HJ-101X	CAPACITOR	100pF,50V
C8010	NCB31CK-104X	CAPACITOR	0.1µF,16V
C8012	X-CS0PCH4H1J	CAPACITOR	22pF,50V
C8013	QETN1HM-106Z	E CAPACITOR	10µF,50V
C8015	QETN0JM-477Z	E CAPACITOR	470µF,6.3V
C8019	QEKJ1CM-106Z	E CAPACITOR	10µF,16V
C8020	X-CS0PCH4K2J	CAPACITOR	270pF,50V
C8021	X-CS0PCH4K2J	CAPACITOR	270pF,50V
C8022	X-E02LU54R7M	E CAPACITOR	4.7µF,50V
C8023	X-CS0PCH4W2J	CAPACITOR	820pF,50V
C8024	X-CS0PCH4W2J	CAPACITOR	820pF,50V
C8025	NDC31HJ-330X	CAPACITOR	33pF,50V
C8026	NDC31HJ-330X	CAPACITOR	33pF,50V
C8027	NDC31HJ-330X	CAPACITOR	33pF,50V
C8028	X-CS0PCH4H1J	CAPACITOR	22pF,50V
C8029	X-CS0PCH4L2J	CAPACITOR	330pF,50V
C8030	X-CS0PCH4L2J	CAPACITOR	330pF,50V
C8031	QEKJ1HM-475Z	E CAPACITOR	4.7µF,50V
C8032	X-E00NU24R7M	E CAPACITOR	4.7µF,16V
C8033	X-CS0PCH4L2J	CAPACITOR	330pF,50V
C8037	QETN0JM-477Z	E CAPACITOR	470µF,6.3V
C8038	QETN0JM-477Z	E CAPACITOR	470µF,6.3V
C8039	QETN0JM-477Z	E CAPACITOR	470µF,6.3V
C8041	NCB31HK-152X	CAPACITOR	0.0015µF,50V
C8043	NDC31HJ-101X	CAPACITOR	100pF,50V
C8044	NDC31HJ-101X	CAPACITOR	100pF,50V
C8046	NDC31HJ-221X	CAPACITOR	220pF,50V
C8048	X-E02LU52R2M	E CAPACITOR	2.2µF,50V
C8049	NCB31EZ-104X	CAPACITOR	0.1µF,25V
C8050	X-E524U2220D	E CAPACITOR	22µF,16V
C8051	X-E02LU52R2M	E CAPACITOR	2.2µF,50V
C8052	X-E02LU2101M	E CAPACITOR	100µF,16V
C8053	QETN1VM-226Z	E CAPACITOR	22µF,35V
C8054	QETN0JM-227Z	E CAPACITOR	220µF,6.3V
C8055	QETN1HM-336Z	E CAPACITOR	33µF,50V
C8057	NCB31EZ-104X	CAPACITOR	0.1µF,25V
C8060	NCB31HK-152X	CAPACITOR	0.0015µF,50V
C8061	X-E524U2220D	E CAPACITOR	22µF,16V
C8062	X-CS0PCH4H1J	CAPACITOR	22pF,50V
C8063	X-CS0PCH4H1J	CAPACITOR	22pF,50V
C8064	X-CS0PCH4K2J	CAPACITOR	270pF,50V
C8065	X-CS0PCH4K2J	CAPACITOR	270pF,50V

#	⚠	REF No.	PART No.	PART NAME, DESCRIPTION	
		C8066	NCB31EZ-104X	CAPACITOR	0.1µF,25V
		C8067	X-E02LU2101M	E CAPACITOR	100µF,16V
		C8068	QETN1CM-476Z	E CAPACITOR	47µF,16V
		C8069	NCB31EZ-104X	CAPACITOR	0.1µF,25V
		C8070	X-E02LU52R2M	E CAPACITOR	2.2µF,50V
		C8071	X-E02LU52R2M	E CAPACITOR	2.2µF,50V
		C8072	QETN1HM-106Z	E CAPACITOR	10µF,50V
		C8075	X-E02LU54R7M	E CAPACITOR	4.7µF,50V
		C8094	QEKJ0JM-476Z	E CAPACITOR	47µF,6.3V
		C8095	X-CS0PB04H4K	CAPACITOR	0.022µF,50V
		C8096	NCB31EZ-104X	CAPACITOR	0.1µF,25V
		C8097	QETN1CM-476Z	E CAPACITOR	47µF,16V
		C8098	NCB31EZ-104X	CAPACITOR	0.1µF,25V
		C8099	NDC31HJ-471X	CAPACITOR	470pF,50V
		C8100	NDC31HJ-471X	CAPACITOR	470pF,50V
	⚠	D502	X-D2WTRM11C0	DIODE	RM11C-EIC
	⚠	D503	X-D2WTRM11C0	DIODE	RM11C-EIC
	⚠	D504	1SS133-T2	DIODE	
		D505	X-D2WTRM11C0	DIODE	RM11C-EIC
	⚠	D506	X-D2WTRM11C0	DIODE	RM11C-EIC
	⚠	D507	X-D23TGP15J0	DIODE	RGP15J-G23
		D509	SARS01-T2	DIODE,SILICON	
	⚠	D510	MTZJ27B-T2	ZENER	
	⚠	D511	X-D28T21DQN9	SCHOTTKY	21DQ09N-TA2B1
		D512	X-D28T21DQN9	SCHOTTKY	21DQ09N-TA2B1
	⚠	D513	X-D2WXN40050	DIODE	1N4005-EIC
		D514	MTZJ13B-T2	ZENER	
	⚠	D515	X-D28T21DQN9	SCHOTTKY	21DQ09N-TA2B1
	⚠	D518	1SS133-T2	DIODE	
	⚠	D522	X-D28TELS6N6	DIODE,RECTIFER	10ELS6N-TA1B2
	⚠	D523	MTZJ33B-T2	ZENER	
		D524	1SS133-T2	DIODE	
		D525	X-D2WXN40050	DIODE	1N4005-EIC
		D530	X-D28TELS6N6	DIODE,RECTIFER	10ELS6N-TA1B2
		D531	MTZJ9.1B	DIODE,ZENER	
		D532	X-D97U03R01B	DIODE,ZENER	MTZJ3.0BT-77
		D534	1SS133-T2	DIODE	
		D535	1SS133-T2	DIODE	
		D536	X-DDDRL41480	DIODE	MCL4148
		D537	X-DDDRL41480	DIODE	MCL4148
		D538	X-DDDRL41480	DIODE	MCL4148
		D539	1SS133-T2	DIODE	
		D651	X-0021E5Q212	LED	LTL-1CHGT-002A
		D656	X-D2WXN40050	DIODE	1N4005-EIC
		D701	1SS133-T2	DIODE	
		D702	MTZJ5.1B	DIODE,ZENER	
		D2001	X-DDDRL41480	DIODE	MCL4148
		D2601	X-DDARDS1210	DIODE	KDS121RTK
		D2602	X-DDARDS1200	DIODE	KDS120RTK
		D3001	X-0010E00330	INFRARED LED	LTE-3271T-012A-O
		D3007	1SS133-T2	DIODE	
		D3009	1SS133-T2	DIODE	
		D8002	MTZJ6.8B-T2	ZENER	
		D8004	X-DDDRL41480	DIODE	MCL4148
		D8006	X-DDDRL41480	DIODE	MCL4148
		D8007	X-DDDRL41480	DIODE	MCL4148
		D8008	1SS133-T2	DIODE	
		D8011	X-DDDRL41480	DIODE	MCL4148
		D8012	X-DDDRL41480	DIODE	MCL4148
		D8013	X-DDDRL41480	DIODE	MCL4148
		D8014	X-DDDRL41480	DIODE	MCL4148

#	⚠	REF No.	PART No.	PART NAME, DESCRIPTION	
		D8015	X-DDDRL41480	DIODE	MCL4148
		D8016	X-DDDRL41480	DIODE	MCL4148
		D8017	X-DDDRL41480	DIODE	MCL4148
		D8018	X-DDDRL41480	DIODE	MCL4148
		V651	X-0040F94003	LED DISPLAY,XVC20US	
			X-0040F94005	LED DISPLAY,XVC21UC	
		IC101	X-I03F3206M0	IC	LA71206M-MPB
	⚠	IC501	X-I1KJ9A4310	IC	KIA431
	⚠	IC502	X-I1KA98R09A	IC	KIA78R09API
	⚠	IC503	X-000220001W	PHOTO COUPLER	PS2561L1-1-V(W)
		IC701	AN3663FBP	IC	
		IC2001	X-I53K08663R	IC	LC78663NRW
		IC2002	X-ICUJ062569	IC	M11L416256SA-35T
		IC2003	BA10358F-XE	IC	
		IC2004	X-I0GF9X2510	IC	PQ1X251M2ZP
		IC2301	X-I03F065600	IC	LA6560
		IC2601	X-I03FR97030	IC	LA9703WL
		IC3001	X-I54F50132A	IC	OEC0132A
		IC3003	X-I9UF032310	IC	PST3231NR
		IC3099	X-A2C301NB05	IC	S-24C02BDP-1A
		IC4001	X-ICQK067420	IC	ZR36742
		IC4002	S-24C02BFJ-X	IC	
		IC4003	X-I0GF9XZ010	IC	PQ070XZ01ZP
		IC4005	X-I59J0160FB	IC	MSM56V16160F-8
		IC4007	X-ICMJ0800A7	IC	SST39VF800A-70-4C-EK
		IC8003	NJM4580M	IC	
		IC8004	X-I17F0742K0	IC	PCM1742KE/2K
		IC8005	X-I0QF02533V	IC	NJM2533V(TE2)
		IC8006	SN74LV4052APW-X	IC	
		Q101	X-TCAA3875SY	TRANSISTOR	KTC3875S_Y_RTK
		Q102	X-TCAA3875SY	TRANSISTOR	KTC3875S_Y_RTK
		Q103	X-TPAAC05002	TRANSISTOR	KRA103SRTK
		Q104	X-TCAT032034	TRANSISTOR	KTC3203_Y-AT
		Q105	X-TAATA12660	TRANSISTOR	KTA1266-AT(Y,GR)
		Q106	X-TAAA1504SY	TRANSISTOR	KTA1504S_Y_RTK
		Q107	X-TAAA1504SY	TRANSISTOR	KTA1504S_Y_RTK
		Q109	X-TCAA3875SY	TRANSISTOR	KTC3875S_Y_RTK
		Q301	X-TCAA3875SY	TRANSISTOR	KTC3875S_Y_RTK
		Q303	X-TNAAC05002	COMPOUND TRANSISTOR	
	⚠	Q501	X-TJXG5NC500	FET	STP5NC50FP
	⚠	Q502	X-TCAT032034	TRANSISTOR	KTC3203_Y-AT
	⚠	Q503	X-TCAT03209Y	TRANSISTOR	KTC3209_Y-AT
	⚠	Q504	X-TAAT012714	TRANSISTOR	KTA1271_Y-AT
	⚠	Q505	X-TCAT032034	TRANSISTOR	KTC3203_Y-AT
		Q506	KRC103S-X	TRANSISTOR	
		Q507	X-TCAA3875SY	TRANSISTOR	KTC3875S_Y_RTK
		Q508	X-TCAA3875SY	TRANSISTOR	KTC3875S_Y_RTK
		Q509	KRC103S-X	TRANSISTOR	
	⚠	Q510	X-TCAT032034	TRANSISTOR	KTC3203_Y-AT
	⚠	Q511	X-TAAT01241Y	TRANSISTOR	KTA1241_Y-AT
		Q530	X-TCAA3875SY	TRANSISTOR	KTC3875S_Y_RTK
		Q531	2SA1037AK/RS/-X	TRANSISTOR	
		Q651	X-TAAA1504SY	TRANSISTOR	KTA1504S_Y_RTK
		Q652	KRC103S-X	TRANSISTOR	
		Q653	KRC103S-X	TRANSISTOR	
		Q654	X-TAAA1504SY	TRANSISTOR	KTA1504S_Y_RTK
		Q655	KRC103S-X	TRANSISTOR	
		Q656	KRC103S-X	TRANSISTOR	
		Q657	KRC103S-X	TRANSISTOR	
		Q658	KRC103S-X	TRANSISTOR	
		Q659	X-TAAA1504SY	TRANSISTOR	KTA1504S_Y_RTK

#	⚠	REF No.	PART No.	PART NAME, DESCRIPTION	
		Q660	KRC103S-X	TRANSISTOR	
		Q661	X-TAAA1504SY	TRANSISTOR	KTA1504S_Y_RTK
		Q662	KRC103S-X	TRANSISTOR	
		Q663	KRC103S-X	TRANSISTOR	
		Q664	KRC103S-X	TRANSISTOR	
		Q665	X-TAAA1504SY	TRANSISTOR	KTA1504S_Y_RTK
		Q666	X-TPAAC05002	TRANSISTOR	KRA103SRTK
		Q2602	X-TCAA3875SY	TRANSISTOR	KTC3875S_Y_RTK
		Q2604	X-TCAA3875SY	TRANSISTOR	KTC3875S_Y_RTK
		Q2605	2SA1036K/QR/-X	TRANSISTOR	2SA1036KT146
		Q2606	X-TCAA3875SY	TRANSISTOR	KTC3875S_Y_RTK
		Q2608	X-TCAA3875SY	TRANSISTOR	KTC3875S_Y_RTK
		Q2609	2SA1036K/QR/-X	TRANSISTOR	2SA1036KT146
		Q3001	X-0002700690	PHOTO COUPLER	RPI-303
		Q3002	X-0002700690	PHOTO COUPLER	RPI-303
		Q3003	X-TPAAC05002	TRANSISTOR	KRA103SRTK
		Q3004	X-0002700680	PHOTO TRANSISTOR	RPI-352C40N
		Q3005	X-0002700680	PHOTO TRANSISTOR	RPI-352C40N
		Q3006	X-0000M00390	PHOTO TRANSISTOR	ST-304L
		Q3007	KRC103S-X	TRANSISTOR	
		Q3008	X-0000M00390	PHOTO TRANSISTOR	ST-304L
		Q8001	X-TAAA1504SY	TRANSISTOR	KTA1504S_Y_RTK
		Q8002	X-TCAA3875SY	TRANSISTOR	KTC3875S_Y_RTK
		Q8003	KRC103S-X	TRANSISTOR	
		Q8004	X-TAATA12660	TRANSISTOR	KTA1266-AT(Y,GR)
		Q8005	X-TCAA3875SY	TRANSISTOR	KTC3875S_Y_RTK
		Q8006	X-TCAA3875SY	TRANSISTOR	KTC3875S_Y_RTK
		Q8007	X-TPAAC05002	TRANSISTOR	KRA103SRTK
		Q8008	KRC103S-X	TRANSISTOR	
		Q8009	X-TPAAA05001	TRANSISTOR	KRA101SRTK
		Q8010	X-TNAAD05001	TRANSISTOR	KRC104SRTK
		Q8011	X-TCAA3875SY	TRANSISTOR	KTC3875S_Y_RTK
		Q8012	X-TCAA3875SY	TRANSISTOR	KTC3875S_Y_RTK
		Q8013	X-TCAA3875SY	TRANSISTOR	KTC3875S_Y_RTK
		B501	X-024HT03563	CORE,BEADS	
		B2001	X-024HC31022	CORE,BEADS	
		B2601	X-024HC31022	CORE,BEADS	
		B2602	X-024HC31022	CORE,BEADS	
		B4001	X-024HC31022	CORE,BEADS	
		B4002	X-024HC31022	CORE,BEADS	
		B4003	X-024HC31022	CORE,BEADS	
		B4004	X-024HC31022	CORE,BEADS	
		B4005	X-024HC31022	CORE,BEADS	
		B4006	X-024HC31022	CORE,BEADS	
		B4007	X-024HC31022	CORE,BEADS	
		B4008	X-024HC31022	CORE,BEADS	
		B4009	X-024HC31022	CORE,BEADS	
		B8001	X-024HC31022	CORE,BEADS	
		B8002	X-024HC31022	CORE,BEADS	
		B8003	X-024HC31022	CORE,BEADS	
		L101	X-031626009R	COIL,BIAS OSC	
		L102	QQL29BJ-101Z	COIL	100µH
		L105	QQL29BJ-101Z	COIL	100µH
		L106	QQL29BJ-220Z	COIL	22µH
		L107	QQL29BJ-220Z	COIL	22µH
		L301	QQL29BJ-220Z	COIL	22µH
	⚠	L501	X-029T000107	COIL,LINE FILTER	0R4A223F20
		L502	X-02AHB0A0A4	CORE,FERRITE	W5T_20*10*10A
		L505	QQL29BJ-220Z	COIL	22µH
	⚠	L506	X-02167E220K	COIL	22µH
		L701	QQL29BJ-220Z	COIL	22µH

#	⚠	REF No.	PART No.	PART NAME, DESCRIPTION	
		L702	QQL29BJ-220Z	COIL	22µH
		L703	QQL29BJ-101Z	COIL	100µH
		L3003	QQL071J-120Y	COIL	12µH
		L4001	QQL29BJ-2R2Z	COIL	2.2µH
		L4002	QQL071J-2R2Y	COIL	2.2µH
		L8001	QQL231J-R27Y	COIL	0.27µH
		L8002	QQL071J-101Y	COIL	100µH
		L8003	QQL231J-R27Y	COIL	0.27µH
		L8004	QQL071J-470Y	COIL	47µH
		L8005	NQL025J-1R8X	COIL	1.8µH,
		L8006	NQL025J-1R8X	COIL	1.8µH,
		L8007	QQL071J-101Y	COIL	100µH
		L8009	NQL025J-1R8X	COIL	1.8µH,
		L8010	NQL025J-1R8X	COIL	1.8µH,
	⚠	T501	X-0481260074	TRANSFORMER,SWITCHING	81260074
		J8001	X-060J411018	RCA JACK	
		J8003	X-060J401087	RCA JACK	
		J8004	X-060J401087	RCA JACK	
		J8005	X-060J421025	RCA JACK	
		J8006	X-063D700005	JACK	
		J8007	X-060J411029	RCA JACK	MSP-213V1-732_PBSN
		J8008	X-060J411024	RCA JACK	
		SW651	QSW0456-001Z	TACT SWITCH	
		SW652	QSW0456-001Z	TACT SWITCH	
		SW653	QSW0456-001Z	TACT SWITCH	
		SW654	QSW0456-001Z	TACT SWITCH	
		SW655	QSW0456-001Z	TACT SWITCH	
		SW3001	X-0508S11001	LEAF SWITCH	
		SW7001	X-0510Y24001	SWITCH SLIDE	SK42H0IG9A
		CP101	X-0697290620	CONNECTOR PCB SIDE	
		CP102	X-069J760029	CONNECTOR PCB SIDE	
		CP651	X-069J750019	CONNECTOR PCB SIDE	
		CP2301	X-069EV83010	CONNECTOR,PCB SIDE	00_6232_008_006_800
		CP2302	X-069S250639	CONNECTOR PCB SIDE	
		CP2601	X-069GYOT079	CONNECTOR,PCB SIDE	09-5000-024-001-006
		CP3001	X-06972C0010	CONNECTOR PCB SIDE	
		X101	X-100DT3R528	CRYSTAL	HC-49/U
		X2001	X-100BT01613	CRYSTAL	16.9344MHz
		X3001	X-100BT01004	CRYSTAL	HC-49U/S
		X3002	QAX0236-001	CRYSTAL	32.768kHz
		X4001	X-100BT02701	CRYSTAL	27MHz
		TU301	X-0162300033	RF UNIT	115-V-H015AR
		CP103	X-067U002019	WIRE HOLDER	B2013H02-2P
	⚠	F501	QMF51U1-2R5-J8	FUSE	
		FH501	X-06710T0006	FUSE HOLDER	
		FH502	X-06710T0006	FUSE HOLDER	
	⚠	CD501	X-120R415907	POWER CORD	
		OS651	X-077Q037001	REMOTE RECEIVER	
		OS8001	X-07A9000006	OPTICAL DEVICE	GP1FA553TZ
		CUSB01	X-800WFAA008	CUSHION,C	
		CUSB02	X-800WFAA006	CUSHION,A	

#	⚠ REF No.	PART No.	PART NAME, DESCRIPTION	

****

OPERATION BOARD ASSEMBLY <28>

	PCB270	X-A2C301T270	PCB ASSY	
	R685	QRE141J-133Y	RESISTOR	13KΩ,1/4W
	R686	QRE141J-682Y	RESISTOR	6.8KΩ,1/4W
	R687	QRE141J-392Y	RESISTOR	3.9KΩ,1/4W
	R688	QRE141J-272Y	RESISTOR	2.7KΩ,1/4W
	R689	QRE141J-332Y	RESISTOR	3.3KΩ,1/4W
	R690	QRE141J-392Y	RESISTOR	3.9KΩ,1/4W
	D685	X-0021E5Q212	LED	LTL-1CHGT-002A
	SW685	QSW0707-001Z	TACT SWITCH	
	SW686	QSW0707-001Z	TACT SWITCH	
	SW687	QSW0707-001Z	TACT SWITCH	
	SW688	QSW0707-001Z	TACT SWITCH	
	SW689	QSW0707-001Z	TACT SWITCH	
	SW690	QSW0707-001Z	TACT SWITCH	
	CD681	X-122H051202	CORD,JUMPER	2H051202
	CP681	X-069J750019	CONNECTOR PCB SIDE	

#	⚠ REF No.	PART No.	PART NAME, DESCRIPTION